TMP007 Infrared Thermopile Sensor with Integrated Math Engine

1 Features

- Integrated MEMS Thermopile for Noncontact Temperature Sensing
- 14-Bit Local Temperature Sensor for Cold Junction Reference
  - ±1°C (max) from 0°C to +60°C
  - ±1.5°C (max) from –40°C to +125°C
- Integrated Math Engine
  - Directly Read Object Temperature
  - Programmable Alerts
  - Nonvolatile Memory for Storing Calibration Coefficients
  - Transient Correction
- Two-Wire Serial Interface Options
  - I^2C and SMBus Compatible
  - Eight Programmable Addresses
- Low Power
  - Supply: 2.5 V to 5.5 V
  - Active Current: 270 µA (typ)
  - 2-µA Shutdown (max)
- Compact Package
  - 1.9-mm × 1.9-mm × 0.625-mm DSBGA

2 Applications

- Noncontact Temperature Sensing
  - Case Temperature
  - Laser Printers
  - Power Relays
  - Health and Beauty
  - HVAC Comfort Optimization
- Gas Concentration
- Flame Detection

3 Description

The TMP007 is a fully-integrated microelectro-mechanical system (MEMS) thermopile sensor that measures the temperature of an object without direct contact. The thermopile absorbs passive infrared energy from an object at wavelengths between 4 um to 16 um within the end-user defined field of view.

The internal math engine combines the corresponding change in voltage across the thermopile with the internal cold-junction reference temperature sensor to calculate the target object temperature. The TMP007 also provides nonvolatile memory for storing calibration coefficients.

The TMP007 is designed with portability and power in mind, and can easily be placed in the tightest of spaces while using standard surface-mount assembly processes. Low power consumption also makes it well suited for battery-powered applications.

The TMP006 offers a reduced feature set. The TMP006 offers similar performance as the TMP007, but does not contain the math engine or nonvolatile memory.

The Infrared thermopile sensor is specified to operate from –40°C to +125°C. It is possible to measure object temperature beyond the device operating range as long as the device itself does not exceed the operating temperature range (–40°C to +125°C).

Device Information(1)

PART NUMBER	PACKAGE	BODY SIZE (NOM)
TMP007	DSBGA (8)	1.90 mm × 1.90 mm

(1) For all available packages, see the package option addendum at the end of the datasheet.

Functional Block Diagram

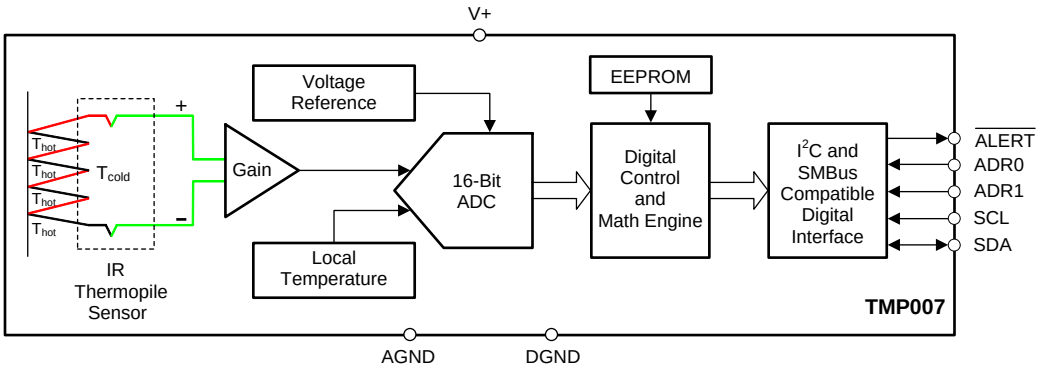

An IMPORTANT NOTICE at the end of this data sheet addresses availability, warranty, changes, use in safety-critical applications, intellectual property matters and other important disclaimers. PRODUCTION DATA.

Table of Contents

1 Features ... 1
2 Applications ... 1
3 Description ... 1
4 Revision History ... 2
5 Pin Configuration and Functions ... 4
6 Specifications ... 5
6.1 Absolute Maximum Ratings ... 5
6.2 ESD Ratings ... 5
6.3 Recommended Operating Conditions ... 5
6.4 Thermal Information ... 5
6.5 Electrical Characteristics ... 6
6.6 Typical Characteristics ... 7
7 Detailed Description ... 10
7.1 Overview ... 10
7.2 Functional Block Diagram ... 10
7.3 Feature Description ... 10
7.4 Device Functional Modes ... 23
7.5 Register Maps ... 26
8 Application and Implementation ... 36
8.1 Application Information ... 36
8.2 Typical Applications ... 36
8.3 System Examples ... 43
9 Power-Supply Recommendations ... 44
10 Layout ... 45
10.1 Layout Guidelines ... 45
10.2 Layout Examples ... 46
11 Device and Documentation Support ... 48
11.1 Device Support ... 48
11.2 Documentation Support ... 48
11.3 Community Resources ... 48
11.4 Trademarks ... 48
11.5 Electrostatic Discharge Caution ... 48
11.6 Glossary ... 48
12 Mechanical, Packaging, and Orderable Information ... 49

4 Revision History

NOTE: Page numbers for previous revisions may differ from page numbers in the current version.

Changes from Revision B (May 2014) to Revision C	Page
• Changed *Features*, *Applications*, and *Description* sections	1
• Changed thermopile sensor portion of functional block diagram	1
• Changed Handling Ratings to ESD Ratings and moved storage temperature to Absolute Maximum Ratings	5
• Added "full angle" to clarify field of view parameter in Electrical Characteristics	6
• Changed Figure 2	7
• Changed thermopile sensor portion of functional block diagram	10
• Deleted last sentence from 2nd paragraph of *Field of View and Angular Response* section	12
• Added Figure 20	12
• Changed text in *Thermopile Principles and Operation* section to clarify temperature measurement	13
• Changed value in Stefan-Boltzman constant definition from 5.7 to 5.67 in Equation 5	14
• Changed C to C2 in Table 1	14
• Changed recalibration item 3 in *Calibration* section	15
• Changed recalibration item 8 in *Calibration* section	15
• Added *Sensor Voltage Format* section	16
• Added *Temperature Format* section	17
• Changed text in Temperature Format section to clarify temperature conversion to degrees Celsius	17
• Changed text in *Slave Receiver Mode* section	19
• Changed text in *Slave Transmitter Mode* section	19
• Changed Figure 24 to clarify timing	21
• Changed incorrect SDA timing in Figure 25	22
• Changed SDA timing in Figure 26	22
• Changed register names in Table 7 to match registers in the rest of document.	26
• Changed register 2 reset value	26
• Changed C coefficient to C2 coefficient in Table 7	26
• Added Manufacturer ID register	26

Copyright © 2014–2015, Texas Instruments Incorporated

Revision History (continued)

- Added missing numbers (3, 2, and 1) to bit descriptions for A1, A2, B0, B1, and B2. 27
- Changed register names in Table 8 to match register names in rest of document 27
- Changed C coefficient to C2 coefficient in Table 8 27
- Changed Figure 31 bit register to show correct bit names..... 28
- Changed Figure 32 bit register reset values 28
- Added T_{OBJ} to all Object Temperature titles in data sheet 29
- Changed Figure 36 to Figure 39 bit register descriptions to show correct bit names..... 31
- Changed Figure 40 bit register reset values 32
- Deleted "Twos complement format" from S0 bit description 32
- Changed Figure 41 bit register reset values 32
- Changed Figure 42 bit register reset values 32
- Changed C to C2 in *C2 Coefficient Register* section 33
- Added Manufacturer ID register 34
- Changed Figure 50 bit register names and reset values 34
- Changed bit names in Figure 51 to match the text shown in Table 8..... 35
- Changed bit names in Figure 52 to match the text shown in Table 8..... 35
- Changed capacitor in Figure 53 from 0.01 µF to 0.1 µF 36
- Changed capacitor in Figure 56 from 0.01 µF to 0.1 µF 40
- Changed σB to σ in Equation 20 to show correct Stefan-Boltzmann symbol 43
- Changed symbol for Stefan-Boltzmann constant from B to σ in Equation 20 43
- Changed decoupling capacitor in *Power-Supply Recommendations* section from 0.01 µF to 0.1 µF 44
- Changed title for Figure 61 46
- Deleted Figure 63, Bottom Layer 47

Changes from Revision A (May 2014) to Revision B — **Page**

- Changed Absolute Maximum Ratings operating temperature range parameter min value from –40 to –55..... 5
- Added operating temperature range parameter to Recommended Operating Conditions 5
- Changed the POR registers in Figure 32 28
- Added OLF bit to status register, Figure 34 29
- Changed OHF bit to status register, Figure 34 29
- Changed Table 9 32
- Changed the POR registers in Figure 40 through Figure 48..... 32
- Changed the POR registers in Figure 50 and Figure 52..... 34
- Changed Table 14 header row titles 40
- Changed Table 14 header row titles 41
- Changed Figure 61 46
- Changed Figure 63, Bottom Layer 47
- Changed Figure 62..... 47

Changes from Original (May 2014) to Revision A — **Page**

- Changed from product preview to production data 1

5 Pin Configuration and Functions

YZF Package
8-Pin DSBGA
Top View

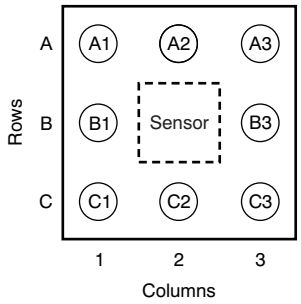

Pin Functions

PIN		DESCRIPTION
NAME	NO.	
ADR0	C1	Input address 0 selection pin
ADR1	B1	Input address 1 selection pin
AGND	A2	Analog ground
$\overline{\text{ALERT}}$	C2	Alert output pin; active low, open-drain. Requires a pull-up resistor to (1.6 V to 5.5 V) supply
DGND	A1	Digital ground
SCL	B3	Input clock pin
SDA	C3	Input/output data pin; open-drain; requires pull-up resistor to (1.6 V to 5.5 V) supply
V+	A3	Supply voltage (2.5 V to 5.5 V)

Copyright © 2014–2015, Texas Instruments Incorporated

6 Specifications

6.1 Absolute Maximum Ratings

over operating free-air temperature range (unless otherwise noted) [(1)(2)]

			MIN	MAX	UNIT
Voltage	Supply voltage, V_S			7	V
	Input voltage	ADR1		V_S + 0.5	V
		All other pins	–0.5	+7	V
Current	Input current, any pin			10	mA
Temperature	Operating range		–40	+125	°C
	Junction, T_J			125	°C
	Storage, T_{stg}		–65	+125	°C

(1) Stresses beyond those listed under *Absolute Maximum Ratings* may cause permanent damage to the device. These are stress ratings only, which do not imply functional operation of the device at these or any other conditions beyond those indicated under *Recommended Operating Conditions*. Exposure to absolute-maximum-rated conditions for extended periods may affect device reliability.
(2) Input voltage rating applies to all TMP007 input voltages.

6.2 ESD Ratings

			VALUE	UNIT
$V_{(ESD)}$	Electrostatic discharge	Human-body model (HBM), per ANSI/ESDA/JEDEC JS-001 [(1)]	±2000	V
		Charged-device model (CDM), per JEDEC specification JESD22-C101 [(2)]	±500	
		Machine model	±200	

(1) JEDEC document JEP155 states that 500-V HBM allows safe manufacturing with a standard ESD control process.
(2) JEDEC document JEP157 states that 250-V CDM allows safe manufacturing with a standard ESD control process.

6.3 Recommended Operating Conditions

over operating free-air temperature range (unless otherwise noted)

	MIN	NOM	MAX	UNIT
Supply voltage, V_S	2.5	3.3	5.5	V
Operating temperature range	–40		+125	°C
Die temperature, T_{DIE}			125	°C
Object temperature, T_{OBJ}	See note [(1)]			°C

(1) Object temperature is application dependent.

6.4 Thermal Information

THERMAL METRIC [(1)]		TMP007 YZF (DSBGA) 8 PINS	UNIT
$R_{\theta JA}$	Junction-to-ambient thermal resistance	115.3	°C/W
$R_{\theta JC(top)}$	Junction-to-case (top) thermal resistance	0.4	°C/W
$R_{\theta JB}$	Junction-to-board thermal resistance	14.3	°C/W
ψ_{JT}	Junction-to-top characterization parameter	3.8	°C/W
ψ_{JB}	Junction-to-board characterization parameter	14.1	°C/W
$R_{\theta JC(bot)}$	Junction-to-case (bottom) thermal resistance	N/A	°C/W

(1) For more information about traditional and new thermal metrics, see the *IC Package Thermal Metrics* application report, SPRA953.

Copyright © 2014–2015, Texas Instruments Incorporated

6.5 Electrical Characteristics

at T_{DIE} = 25°C, and V+ = +3.3 V (unless otherwise noted)

PARAMETER		TEST CONDITIONS	MIN	TYP	MAX	UNIT
DEVICE PERFORMANCE						
	Responsivity (signal)	T_{DIE} = 0°C to 100°C, T_{OBJ} = 0°C to 60°C		9		V/W
	Sensor noise	1-s conversion, T_{DIE} = 0°C to 60°C, T_{OBJ} = 0°C to 60°C		300		nVrms
	Noise equivalent power (NEP)	At 1 σ, T_{DIE} = 0°C to 60°C, T_{OBJ} = 0°C to 60°C		32		nW
	Noise equivalent temperature difference(1)(NETD)	T_{DIE} = 0°C to 60°C, T_{OBJ} = 0°C to 60°C		90		mK
	Noise equivalent temperature difference (NETD)	At F/1 (6 σ), T_{DIE} = 25°C, T_{OBJ} = 0°C to 60°C		1.4		°C
	Absorber size			330 × 330		µm
REFERENCE SYSTEM PERFORMANCE(1)						
	Object temperature accuracy(1) (error)	T_{DIE} = 20°C to 40°C, T_{OBJ} = 20°C to 60°C		±1	±3	°C
		T_{DIE} = 0°C to 60°C, T_{OBJ} = –15°C to 85°C		±2	±5	°C
TEMPERATURE MEASUREMENT						
T_{DIE}	Die temperature range		–40		+125	°C
	T_{DIE} accuracy (error)			±0.5	±1	°C
	Accuracy vs supply			±0.1	±0.2	°C/V
	Conversion time			0.25		Second
	Temperature resolution (object and local)			0.03125		°C/LSB
	Field of view (50% responsivity, full angle)			90		Degrees
DIGITAL PINS						
V_{IH}	High-level input voltage		1.4			V
V_{IL}	Low-level input voltage				0.4	V
	Hysteresis			200		mV
V_{OL}	Low-level output voltage, SDA	I_{OUT} = –6 mA		0.05	0.4	V
	Output $\overline{\text{ALERT}}$ logic low sink	I_{OUT} = –6 mA		0.200		V
I_{IN}	Input current	0 V < V_{IN} < 5.5 V	–1		+1	µA
	Input capacitance			3		pF
	SMBus frequency		0.01		2.5	MHz
	Timeout time		25	28	35	ms
POWER SUPPLY						
V+	Operating supply range		2.5		5.5	V
POR	Power-on reset			1.9		V
	Nonvolatile memory programming voltage		2.5		5.5	V
	Nonvolatile memory programming current	Supply current pulse time < 3 ms		2.8		mA
I_Q	Quiescent current	Serial bus inactive, continuous conversion		270	350	µA
		Low power conversion, serial bus inactive, CR2 = 1, CR1 = x, CR0 = 1		85(2)		µA
		Low power conversion serial bus active, CR2 = 1, CR1 = 1, CR0 = 0		60(2)		µA
I_{SD}	Shutdown current	Serial bus inactive		2	4	µA
		Serial bus active, 400 kHz		36		µA

(1) This parameter is tested in a fully-settled setup with no transients, in front of a black body, ε = 0.95, field of view (FOV) = 110°, with the recommended layout , and after system calibration with a common set of coefficients loaded.
(2) Average current over complete measurement cycle.

Copyright © 2014–2015, Texas Instruments Incorporated

6.6 Typical Characteristics

at T_{DIE} = 25°C, and V+ = +3.3 V (unless otherwise noted)

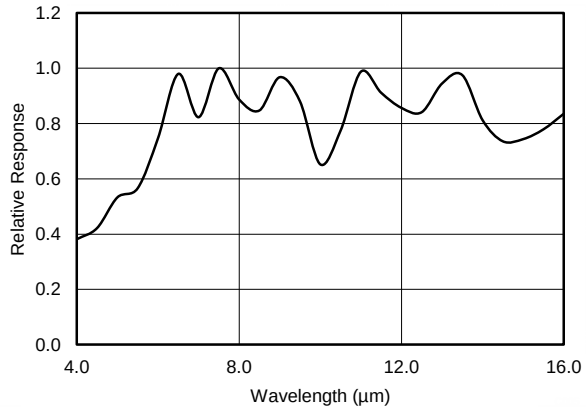

Figure 1. Relative Spectral Response vs Wavelength

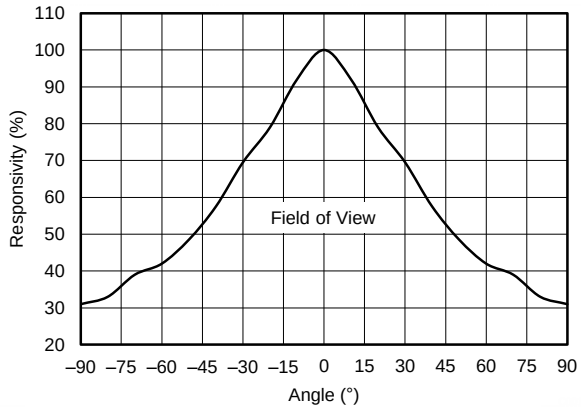

Figure 2. Responsivity vs Angle

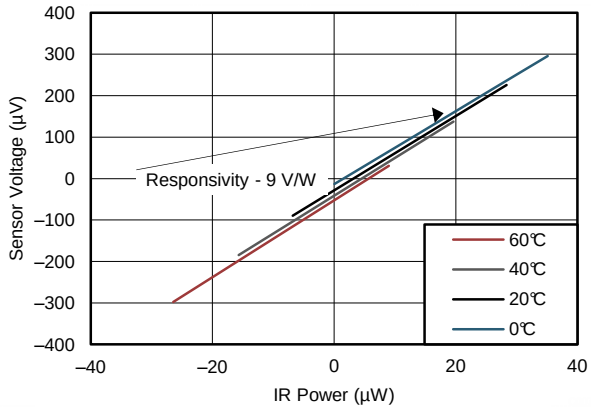

NOTE: The responsivity is the slope of the lines.

Figure 3. Sensor Voltage vs IR Power Over T_{DIE}

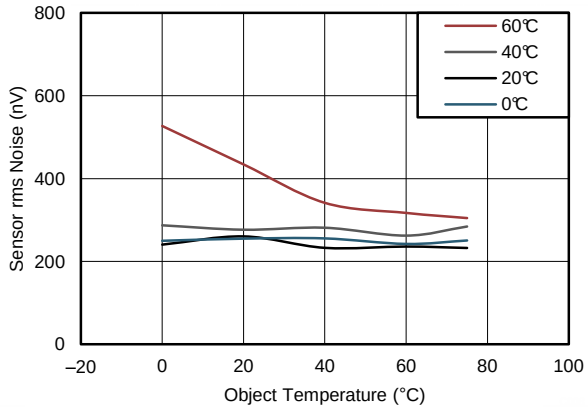

Figure 4. Sensor Noise vs T_{OBJ} and T_{DIE}

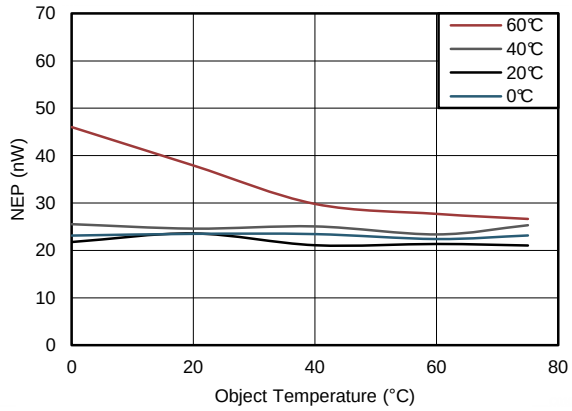

Figure 5. NEP vs T_{OBJ} and T_{DIE}

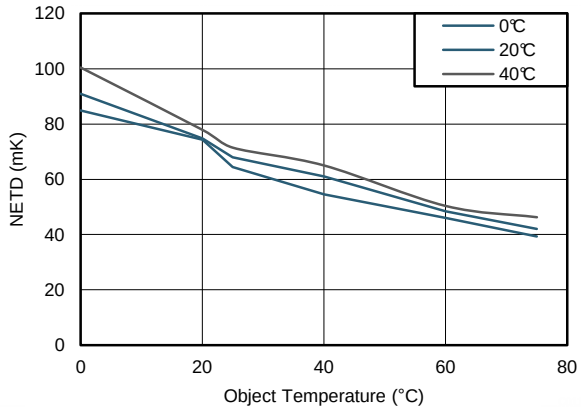

Figure 6. NETD for Reference System at F/1 Over T_{DIE}

Typical Characteristics (continued)

at T_{DIE} = 25°C, and V+ = +3.3 V (unless otherwise noted)

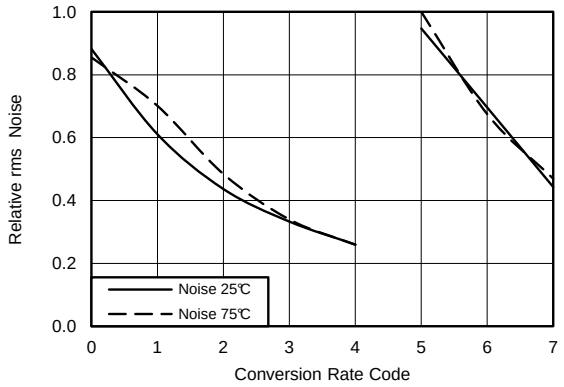

NOTE: In the last three conversion modes, there is a change in sensor voltage, and a different set of calibration coefficients may be needed depending on the accuracy required.

Figure 7. Sensor Noise at T_{DIE} = 25°C and 75°C vs Sample Time

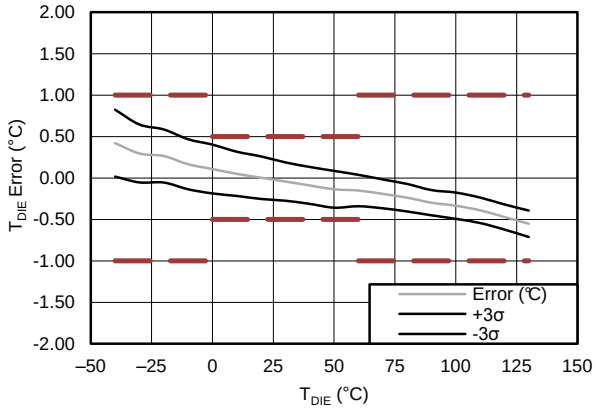

Figure 8. T_{DIE} Accuracy

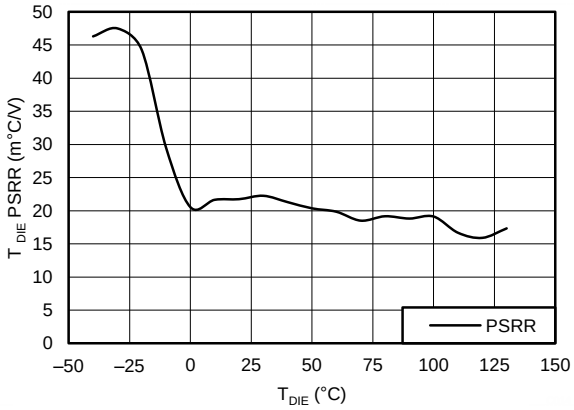

2.5 V < V_S < 5.5 V

Figure 9. T_{DIE} PSRR vs T_{DIE}

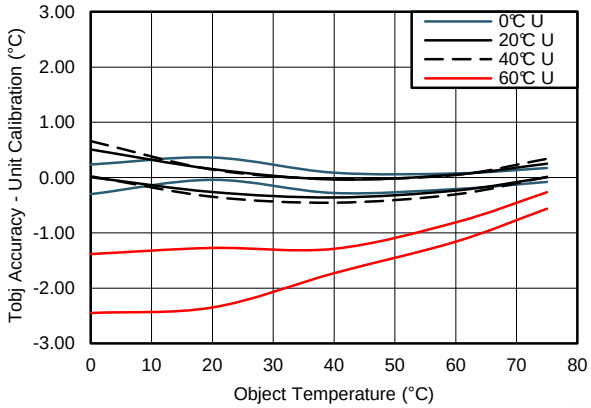

Figure 10. Accuracy with Unit Calibration (0°C to 60°C)

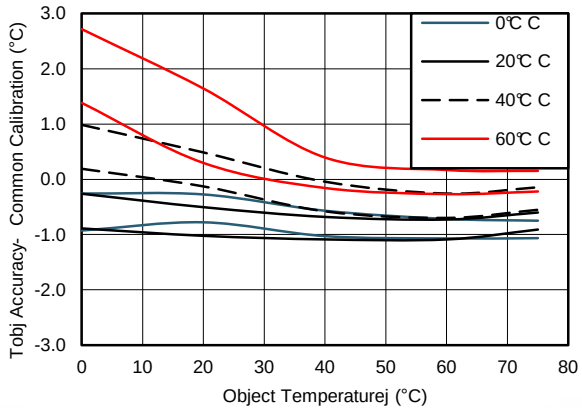

Figure 11. Accuracy with Common Calibration (0°C to 60°C)

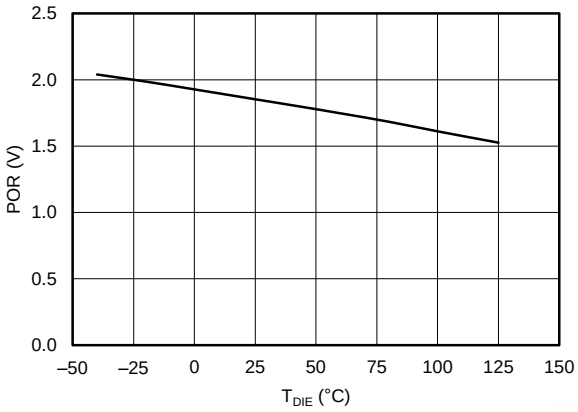

Figure 12. POR Voltage vs T_{DIE}

Copyright © 2014–2015, Texas Instruments Incorporated

Typical Characteristics (continued)

at T_{DIE} = 25°C, and V+ = +3.3 V (unless otherwise noted)

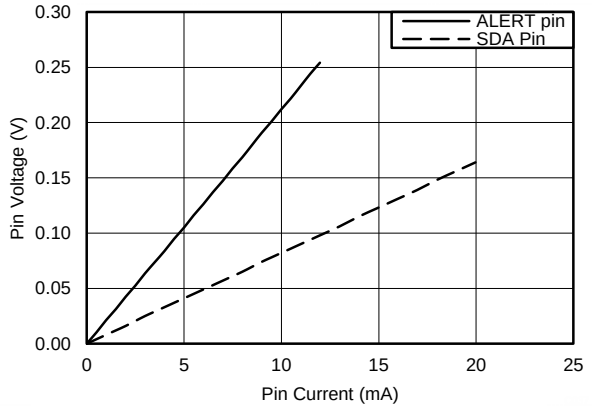

Figure 13. Output Pin Voltage vs Current

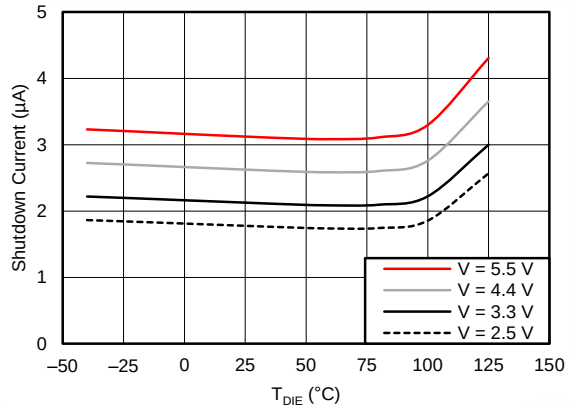

Figure 14. ShutDown Current vs T_{DIE}

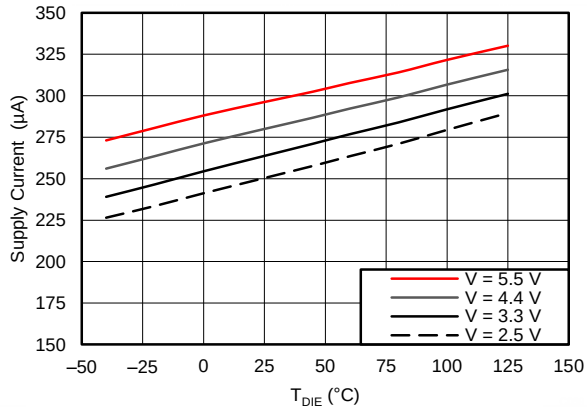

Figure 15. Supply Current vs T_{DIE} (Continuous Conversion)

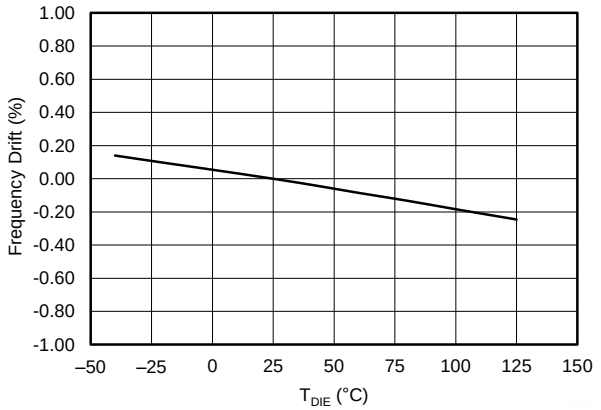

Figure 16. Conversion Frequency Stability vs T_{DIE}

7 Detailed Description

7.1 Overview

The TMP007 is an integrated digital thermopile temperature sensor in a wafer chip-scale package (WCSP) that detects the temperature of a remote object by its infrared (IR) emission. It is optimal for thermal management and thermal protection applications where remote noncontact temperature sensing is desired. The TMP007 is two-wire and SMBus interface compatible, and is specified over the temperature range of –40°C to 125°C. The TMP007 contains registers for holding configuration and calibration information, temperature limits, local temperature, T_{DIE}, measurement results, and the thermopile voltage measurement result. The local temperature and the thermopile voltage measurements are used by the math engine to calculate the object temperature, which is then stored in the respective register. In addition, the TMP007 has an internal EPROM memory that can be used to store the factory default values and custom values for coefficients and calibration parameters. The values in EPROM can be transferred to the registers either individually or as a complete set.

The SDA (and SCL, if driven by an open-drain output) interface pin requires a pull-up resistor (10 kΩ, typical) as part of the communication bus. The $\overline{\text{ALERT}}$ pin is an open-drain output that must also use a pull-up resistor, or be left floating if unused. If desired, $\overline{\text{ALERT}}$ may be shared with other devices for a wired-OR implementation.

7.2 Functional Block Diagram

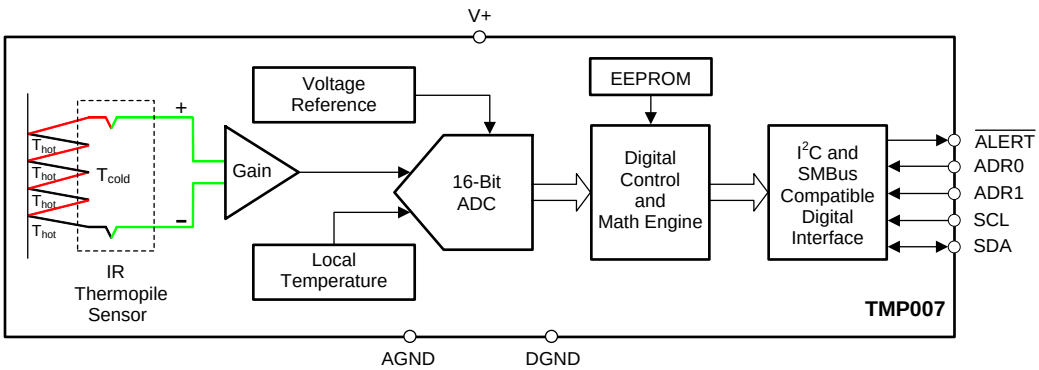

7.3 Feature Description

The TMP007 senses the IR radiation that is emitted by all objects. The spectrum of the radiation depends only on the temperature and is given by Planck's law, as shown in Equation 1:

$$B_\lambda(T,\lambda) = \frac{2hc^2}{\lambda^5}\left(\frac{1}{e^{\frac{hc}{\lambda k_B T}} - 1}\right) \text{watts / cm}^2 / \mu\text{m} \quad (1)$$

where

- h = Planck's constant
- c = speed of light
- k_B = Boltzmann's constant
- λ = wavelength in microns

Copyright © 2014–2015, Texas Instruments Incorporated

Feature Description (continued)

The intensity of radiation from the object is determined by the emisivity (ε), a material-dependent property that scales the spectral response so that 0 < ε < 1. For an ideal black body, the radiation is at a maximum for a given temperature and ε = 1. The temperature is measured on the Kelvin scale where 0 K is absolute zero, or –273.15°C. Room temperature (25°C) is approximately 298.13 K. The emission spectra for objects at or near room temperature are shown in Figure 17. For these temperatures, the majority of the radiation emitted is in the wavelength range of 3 µm to 20 µm.

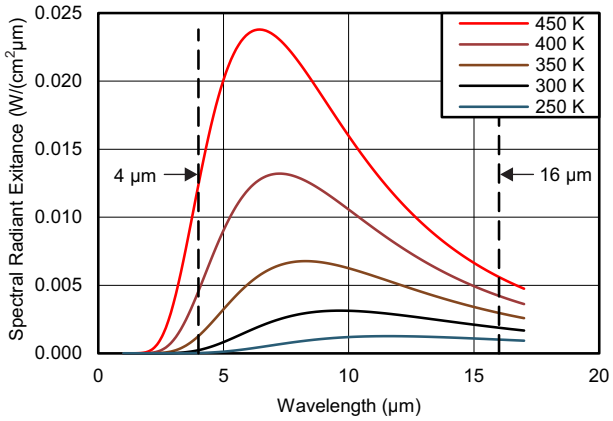

Figure 17. Black Body Emission Spectrum and Response

7.3.1 Spectral Responsivity

The TMP007 is optimized to sense IR radiation emitted by objects from approximately 250 K (–23°C) to 400 K (127°C), with maximum sensitivity from approximately 4 µm to 16 µm. The relative spectral response of the TMP007 is shown in Figure 18.

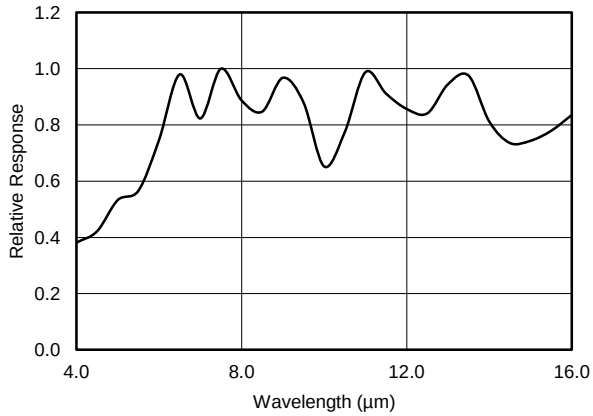

Figure 18. Relative Spectral Response vs Wavelength

Feature Description (continued)

7.3.2 Field of View and Angular Response

The TMP007 senses all radiation within a defined field of view (FOV). The FOV (or full-angle of θ) is defined as 2Φ. The TMP007 contains no optical elements, and thus senses all radiation within the hemisphere to the front of the device. Figure 2 shows the angular dependence of the sensor response and the relative power for a circular object that subtends a half angle of phi (Φ). Figure 19 defines the angle Φ in terms of object diameter and distance. Figure 19 assumes that the object is well approximated as a plane that is perpendicular to the sensor axis.

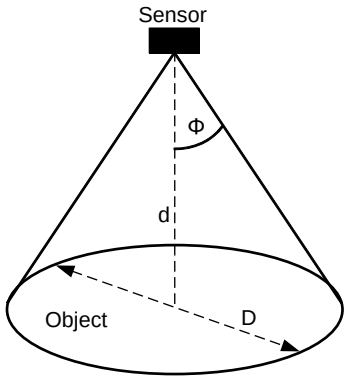

Figure 19. FOV Geometry Definition

In this case, the maximum contribution is from the portion of the object directly in front of the TMP007 (Φ = 0), with the sensitivity per solid angle, dR/dΦ decreases as Φ increases. Approximately 50% of the energy sensed by the TMP007 is within a FOV (θ) = 90°.

This discussion is for illustrative purposes only; in practice the angular response (dR/dΦ) of the TMP007 to the object is affected by the object orientation, the number of objects, and the precise placement relative to the TMP007. Figure 20 shows the thermopile sensor dimensions.

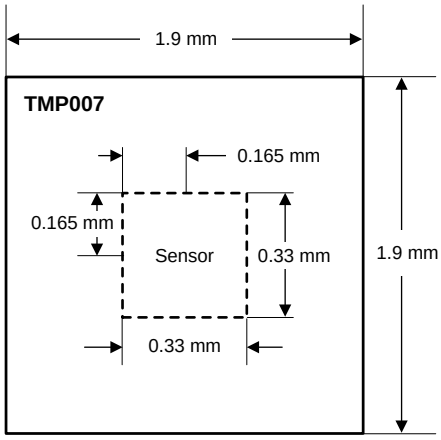

NOTE: Thermopile sensor is centered in the device.

Figure 20. Thermopile Sensor Dimensions

Copyright © 2014–2015, Texas Instruments Incorporated

Feature Description (continued)

7.3.3 Thermopile Principles and Operation

The TMP007 senses radiation by absorbing the radiation on a hot junction. The thermopile then generates a voltage proportional to the temperature difference between the hot junction, T_{hot}, and the cold junction, T_{cold}.

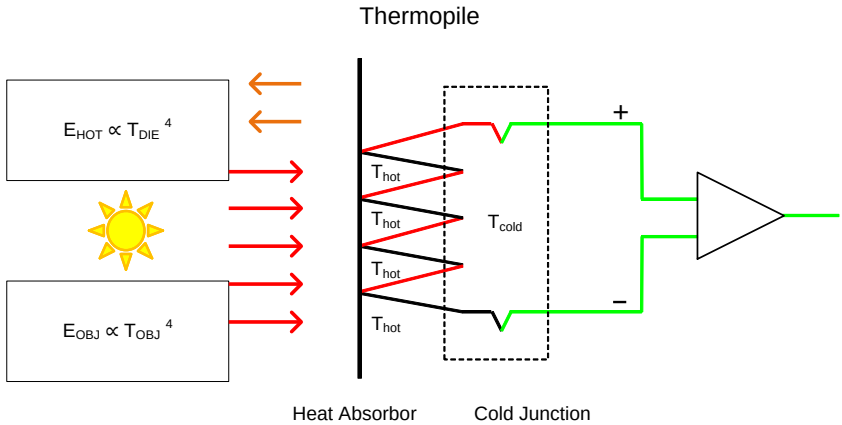

Figure 21. Principle of Thermopile Operation

The cold junction is thermally grounded to the die, and is effectively T_{DIE}, the die temperature. In thermal equilibrium, the hot junction is determined by the object temperature, T_{OBJ}. The energy emitted by the object, E_{OBJ}, minus the energy radiated by the die, E_{DIE}, determines the temperature of the hot junction. The output voltage, V_{OUT}, is therefore determined by the relationship shown in Equation 2:

$$V_{OUT} = V_{SENSOR} = C \times (T_{HOT} - T_{COLD}) \propto (T_{OBJ}4 - T_{DIE}4)$$

where

- C is a constant depending on the design of the sensing element. (2)

Note that the sensor voltage is related to both the object temperature and the die temperature. A fundamental characteristic of all thermopiles is that they measure temperature *differentials*, not *absolute* temperatures. The TMP007 contains a highly-accurate, internal temperature sensor to measure T_{DIE}. Knowing T_{DIE} and V_{SENSOR} enables the TMP007 to estimate T_{OBJ}. For each 250-ms conversion cycle, the TMP007 measures a value for V_{SENSOR} and for T_{DIE}, calculates T_{OBJ}, and then places the values in the respective registers.

Bits CR2 to CR0 determine the number of local and sensor analog-to-digital converter (ADC) results to average before the object temperature is calculated.

After power-on reset (POR), the TMP007 starts in four conversions per second (mode 010). In general, for a mode with *N* conversions, the local temperature, T_{DIE}, result is updated at the end of the *Nth* ADC conversion with the value shown in Equation 3:

$$T_{DIE} = \frac{1}{N}\sum_{X=1}^{N} \text{Local Temp Conversion}_X \tag{3}$$

Similarly, the sensor voltage result is updated at the end of the *Nth* sensor ADC conversion with the value shown in Equation 4:

$$V_{SENSOR} = \frac{1}{N}\sum_{X=1}^{N} \text{Sensor Conversion}_X \tag{4}$$

These results are then used in the object temperature calculation by the math engine, which updates the object temperature result register. The total conversion time and averages per conversion can be optimized to select the best combination of update rate versus noise for an application. Additionally, low-power conversion mode is available. In CR settings 101, 110, and 111, the device inserts a standby time before the beginning of the next conversion or conversions.

The method and requirements for estimating T_{OBJ} are described in the next section.

Feature Description (continued)

7.3.4 Object Temperature Calculation

The TMP007 generates a sensor voltage, V_{Sensor}, in register 00h that is related to the energy radiated by the object. For an ideal situation, the Stefan-Boltzman law relates the energy radiated by an object to its temperature by the relationship shown in Equation 5:

$$Energy_{Rad} = \varepsilon\sigma T_{OBJ}^4$$

where

- σ = Stefan-Boltzman constant = 5.67×10^{-12} W/(cm^{2}K^4)
- ε = Emissivity, 0 < ε < 1, an object dependent factor, ε = 1 for a perfect black body (5)

A similar relationship holds for the sensing element itself that radiates heat at a rate determined by T_{DIE}. The net energy absorbed by the sensor is then given by the energy absorbed from the object minus the energy radiated by the sensor, as shown in Equation 6:

$$V_{SENSOR} \propto E_{ABSORBED} - E_{RADIATED} = \varepsilon\sigma\left(T_{OBJ}^4 - T_{DIE}^4\right) \tag{6}$$

In an ideal situation, the sensor voltage relates to object temperature as shown in Equation 7:

$$T_{OBJ} = \sqrt[4]{T_{DIE}^4 + \frac{V_{SENSOR}}{\varepsilon\sigma}} \tag{7}$$

$$T_{OBJ} = \sqrt[4]{T_{DIE}^4 + \left(\frac{f\{V_{OBJ}\}}{S}\right)}$$

where

- S is a system-dependent parameter incorporating the object emissivity (ε), FOV, and sensor characteristics. The parameters S0, A1, and A2 are used in determining S.
- $f(V_{OBJ})$ is a function that compensates for heat flow other than radiation, such as convection and conduction, from nearby objects. The parameters B0, B1, and B2 are used to tune this function to a particular system and environment. (8)

The coefficients affect object temperature measurement as described in Table 1.

Table 1. Calibration Coefficient Definitions

COEFFICIENT	PURPOSE	CALIBRATION	COMMENT
S0	FOV and emissivity of object	Application and object dependent	Default values based on black body with ε = 0.95, and 110° FOV
A1, A2	Device properties	Factory set	Default values based on typical sensor characteristics
C2	Device properties	Factory set	Default values based on typical sensor characteristics
B0, B1, B2	Corrects for energy sources	Environment dependent	Calibrate in end-application environment

Copyright © 2014–2015, Texas Instruments Incorporated

7.3.5 Calibration

The TMP007 default coefficients are calibrated with a black body of emissivity, ε = 0.95, and an FOV (θ) = 110°. Use these coefficients for applications where the object emissivity and geometry satisfy these conditions. For applications with different object emissivity or geometry, calibrate the TMP007 to accurately reflect the object temperature and system geometry. Accuracy is affected by device-to-device or object-to-object variation. For the most demanding applications, calibrate each device individually.

As an overview the calibration procedure includes:

1. Defining the environmental variation range (die and object temperature range, supply voltage, temperature change speed, sampling rate and so on).
2. Making the die temperature measurements and IR sensor voltage measurements over the environmental range.
3. Generate an optimal set of coefficients based on the collected data set.
4. Load the coefficients into the TMP007 coefficients register. The object temperature register reflects the best fit from the calibration process. Perform validation measurements because accuracy may vary over the environmental range. If the object temperature measurement error is not acceptable, repeat the calibration process using more environment points, data averaging, or narrow the temperature range of T_{DIE} or T_{OBJ}.
5. After a suitable set of coefficients is obtained, they can be stored in nonvolatile memory. Each coefficient register can be programmed up to eight times. After POR, the last stored coefficient value is copied from the nonvolatile memory into the coefficient register.

The best temperature precision is available if every device is calibrated individually. Alternatively, if all the units in the application use the same coefficients, then calibrate a statistically significant number of devices, and load averaged coefficient values in nonvolatile memory.

Recalibration may be required under any or all of the following conditions:

1. Board layout changed.
2. Object or objects in the field of view changed.
3. Object distance or object surface changed.
4. Angle between device surface and direction to the object changed.
5. Object and local temperature range changed outside the environmental calibration range.
6. Object and local temperature transients significantly changed.
7. Supply voltage changed more than 1 V.
8. Air convection or conduction near the device changed.

For further information and methods for calibration, refer to SBOU142 — *TMP007 Calibration Guide*.

7.3.6 Sensor Voltage Format

The TMP007 provides 16 bits of data in binary twos complement format. The positive full-scale input produces an output code of 7FFFh and the negative full-scale input produces an output code of 8000h. The output clips at these codes for signals that exceed full-scale. Table 2 summarizes the ideal output codes for different input signals. Figure 22 illustrates code transitions versus input voltage. Full-scale is a 5.12-mV signal. The LSB size is 156.25 nV.

Table 2. Input Signal Versus Ideal Output Code(1)

SENSOR SIGNAL	VOLTAGE	OUTPUT CODE
FS $(2^{15} – 1) / 2^{15}$	5.12 mV	7FFFh
FS / 2^{15}	156.25 nV	0001h
0	0 V	0000h
–FS / 2^{15}	–156.25 nV	FFFFh
–FS	–5.12 mV	8000h

(1) FS = Full-scale value.

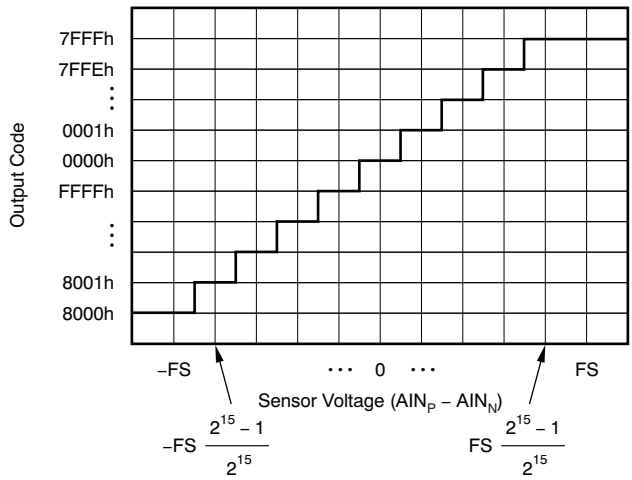

Figure 22. Code Transition Diagram

Copyright © 2014–2015, Texas Instruments Incorporated

7.3.7 Temperature Format

The temperature register data format of the TMP007 is reported in a binary twos complement signed integer format, as Table 3 shows, with 1 LSB = (1 / 32)°C = 0.03125°C.

Table 3. Temperature Data Format

TEMPERATURE (°C)	DIGITAL OUTPUT (BINARY)	SHIFTED HEX
150	0100 1011 0000 0000	12C0
125	0011 1110 1000 0000	0FA0
100	0011 0010 0000 0000	0C80
80	0010 1000 0000 0000	0A00
75	0010 0101 1000 0000	0960
50	0001 1001 0000 0000	0640
25	0000 1100 1000 0000	0320
0.03125	0000 0000 0000 0100	0001
0	0000 0000 0000 0000	0000
–0.03125	1111 1111 1111 1100	FFFF
–0.0625	1111 1111 1111 1000	FFFE
–25	1111 0011 0111 0000	FCDC
–40	1110 1011 1111 1100	FAFF
–55	1110 0100 0111 1100	F91F

To convert the integer temperature result of the TMP007 to degrees Celsius, right-shift the result by two bits. Then perform a divide-by-32 of T_{DIE} and T_{OBJ}, the 14-bit signed integers contained in the corresponding registers. The sign of the temperature is the same as the sign of the integer read from the TMP007. In twos complement notation, the MSB is the sign bit. If the MSB is 1, the integer is negative and the absolute value can be obtained by inverting all bits and adding 1. An alternate method of calculating the absolute value of negative integers is abs(i) = i xor FFFFh + 1.

7.3.8 Serial Interface

The TMP007 operates only as a slave device on the serial bus. Connections to the bus are made using the SCL Input and open-drain I/O SDA line. The SDA and SCL pins feature integrated spike suppression filters and Schmitt triggers to minimize the effects of input spikes and bus noise. The TMP007 supports the transmission protocol for both fast and fastplus (1 kHz to 1 MHz) and high-speed (1 MHz to 2.5 MHz) mode. All data bytes are transmitted MSB first. At higher speeds, thermal dissipation affects device operation, including accuracy.

7.3.8.1 Bus Overview

The device that initiates a transfer is called a *master*, and the devices controlled by the master are *slaves*. The bus must be controlled by a master device that generates the serial clock (SCL), controls the bus access, and generates the start and stop conditions.

To address a specific device, a start condition is initiated, indicated by pulling the data-line (SDA) from a high-to-low logic level while SCL is high. All slaves on the bus shift in the slave address byte, with the last bit indicating whether a read or write operation is intended. During the ninth clock pulse, the slave being addressed responds to the master by generating an Acknowledge and pulling SDA low.

Data transfer is then initiated and sent over eight clock pulses followed by an acknowledge bit. During data transfer SDA must remain stable while SCL is high, as any change in SDA while SCL is high will be interpreted as a control signal.

Once all data has been transferred, the master generates a stop condition, indicated by pulling SDA from low to high while SCL is high.

7.3.8.2 Serial Bus Address

To communicate with the TMP007, the master must first address slave devices via a slave address byte. The slave address byte consists of seven address bits, and a direction bit indicating the intent of executing a read or write operation. The TMP007 features two address pins allowing up to eight devices to be connected on a single bus. Pin logic levels and the corresponding address values are described in Table 4.

Table 4. Address Pins and Slave Addresses

ADR1	ADR0	SMBus ADDRESSES
0	0	1000000
0	1	1000001
0	SDA	1000010
0	SCL	1000011
1	0	1000100
1	1	1000101
1	SDA	1000110
1	SCL	1000111

7.3.8.3 Writing and Reading Operations

Accessing a particular register on the TMP007 is accomplished by writing the appropriate value to the pointer register. The value for the pointer register is the first byte transferred after the slave address byte with the R/W bit low. Every write operation to the TMP007 requires a value for the pointer register (see Figure 24).

When reading from the TMP007, the last value stored in the pointer register by a write operation is used to determine which register is read by a read operation. To change the register pointer for a read operation, write a new value to the pointer register. This action is accomplished by issuing a slave address byte with the R/W bit low, followed by the pointer register byte. No additional data are required. The master then generates a start condition and sends the slave address byte with the R/W bit high to initiate the read command. See Figure 25 for details of this sequence. If repeated reads from the same register are desired, it is not necessary to continually send the pointer register byte because the TMP007 remembers the pointer register value until it is changed by the next write operation.

Note that register bytes are sent most significant byte first, followed by the least significant byte.

Copyright © 2014–2015, Texas Instruments Incorporated

7.3.8.4 Slave Mode Operations

The TMP007 operates as a slave receiver or slave transmitter.

7.3.8.4.1 Slave Receiver Mode

The first byte transmitted by the master is the slave address, with the R/W bit low. The TMP007 then acknowledges reception of a valid address. The next byte transmitted by the master is the pointer register. The TMP007 then acknowledges reception of the pointer register byte. The next two bytes are written to the register addressed by the pointer register. The TMP007 acknowledges reception of both data bytes. The master terminates data transfer by generating a start or stop condition.

7.3.8.4.2 Slave Transmitter Mode:

The first byte is transmitted by the master and is the slave address, with the R/W bit high. The TMP007 acknowledges reception of a valid slave address. The next two bytes transmitted by the TMP007 are the value in the register indicated by the pointer register.

The master acknowledges reception of both data bytes. The master terminates the data transfer by generating a *not-acknowledge* bit on reception of any data byte, or generating a start or stop condition.

7.3.8.5 SMBus Alert Function

The TMP007 supports the SMBus alert function. When the TMP007 is operating in interrupt mode (TM = 1), the $\overline{\text{ALERT}}$ pin of the TMP007 can be connected as an SMBus alert signal. When a master senses that an alert condition is present on the $\overline{\text{ALERT}}$ line, the master sends an SMBus alert command (00011001) on the bus. If the $\overline{\text{ALERT}}$ pin of the TMP007 is active, the devices acknowledge the SMBus alert command and respond by returning its slave address on the SDA line. The eighth bit (LSB) of the slave address byte indicates if the cause of the alert condition is caused by the temperature exceeding T_{HIGH} or falling below T_{LOW}. This bit is high if the temperature is greater than T_{HIGH}. This bit is low if the temperature is less than T_{LOW}. See Figure 26 for details of this sequence.

If multiple devices on the bus respond to the SMBus alert command, arbitration during the slave address portion of the SMBus alert command determines which device clears the alert status. If the TMP007 wins the arbitration, its $\overline{\text{ALERT}}$ pin becomes inactive at the completion of the SMBus alert command. If the TMP007 loses the arbitration, the TMP007 $\overline{\text{ALERT}}$ pin remains active.

7.3.8.6 General Call

The TMP007 responds to a two-wire general call address (0000000) if the eighth bit is 0. The device acknowledges the general call address and respond to commands in the second byte. If the second byte is 00000110, the TMP007 internal registers are reset to power-up values.

7.3.8.7 High-Speed (Hs) Mode

In order for the two-wire bus to operate at frequencies above 400 kHz, the master device must issue an SMBus Hs-mode master code (00001xxx) as the first byte after a start condition to switch the bus to high-speed operation. The TMP007 does not acknowledge this byte, but switches its input filters on SDA and SCL, and its output filters on SDA to operate in Hs-mode, allowing transfers at up to 2.5 MHz. After the Hs-mode master code has been issued, the master transmits a two-wire slave address to initiate a data transfer operation. The bus continues to operate in Hs-mode until a stop condition occurs on the bus. Upon receiving the stop condition, the TMP007 switches the input and output filters back to fast-mode operation.

7.3.8.8 Timeout Function

The TMP007 resets the serial interface if SCL is held low for 30 ms (typ) between a start and stop condition. The TMP007 releases the bus if SCL is pulled low and waits for a start condition. To avoid activating the timeout function, maintain a communication speed of at least 1 kHz for SCL operating frequency.

Copyright © 2014–2015, Texas Instruments Incorporated

7.3.8.9 Two-Wire Timing

The TMP007 is two-wire and SMBus compatible. Figure 23 to Figure 26 describe the various operations on the TMP007. Parameters for Figure 23 are defined in Table 5. Bus definitions are:

Bus Idle Both SDA and SCL lines remain high.

Start Data Transfer A change in the state of the SDA line, from high to low, while the SCL line is high defines a start condition. Each data transfer is initiated with a start condition.

Stop Data Transfer A change in the state of the SDA line from low to high while the SCL line is high defines a stop condition. Each data transfer is terminated with a repeated start or stop condition.

Data Transfer The number of data bytes transferred between a start and a stop condition is not limited, and is determined by the master device.

The receiver acknowledges the transfer of data. It is also possible to use the TMP75B for single-byte updates. To update only the MS byte, terminate communication by issuing a start or stop condition on the bus.

Acknowledge Each receiving device, when addressed, must generate an acknowledge bit.

A device that acknowledges must pull down the SDA line during the acknowledge clock pulse so that the SDA line is stable low during the high period of the acknowledge clock pulse. Setup and hold times must be taken into account. When a master receives data, the termination of the data transfer can be signaled by the master generating a *not-acknowledge* (1) on the last byte transmitted by the slave.

Table 5. Two-Wire Timing Requirements

		FAST MODE		HIGH-SPEED MODE		UNIT
		MIN	MAX	MIN	MAX	
$f_{(SCL)}$	SCL operating frequency	0.001	0.4	0.001	2.5	MHz
$t_{(BUF)}$	Bus free time between stop and start condition	1300		260		ns
$t_{(HDSTA)}$	Hold time after repeated start condition. After this period, the first clock is generated.	600		160		ns
$t_{(SUSTA)}$	Repeated start condition setup time	600		160		ns
$t_{(SUSTO)}$	Stop condition setup time	600		160		ns
$t_{(HDDAT)}$	Data hold time	0	900	0	150	ns
$t_{(SUDAT)}$	Data setup time	100		30		ns
$t_{(LOW)}$	SCL clock low period	1300		260		ns
$t_{(HIGH)}$	SCL clock high period	600		60		ns
t_F, t_R – SDA	Data fall and rise time		300		80	ns
t_F, t_R – SCL	Clock fall and rise time		300		40	ns
t_R	Rise time for SCL ≤ 100 kHz		1000			ns

Copyright © 2014–2015, Texas Instruments Incorporated

7.3.8.10 Two-Wire Timing Diagrams

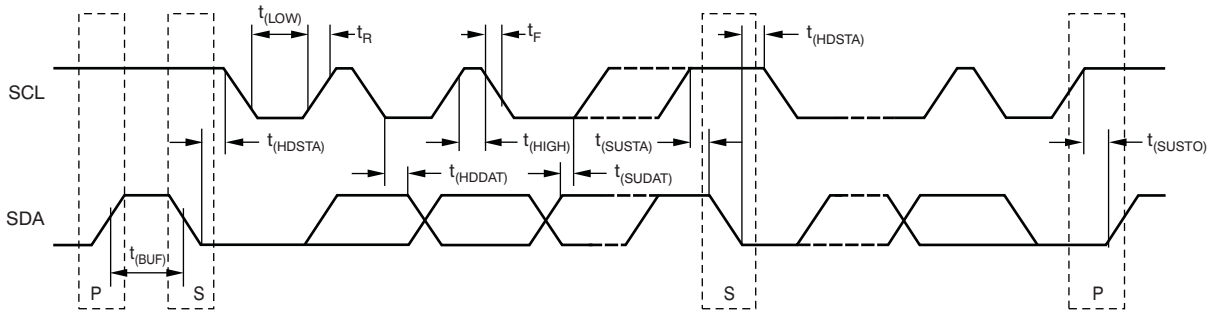

Figure 23. Two-Wire Timing Diagram

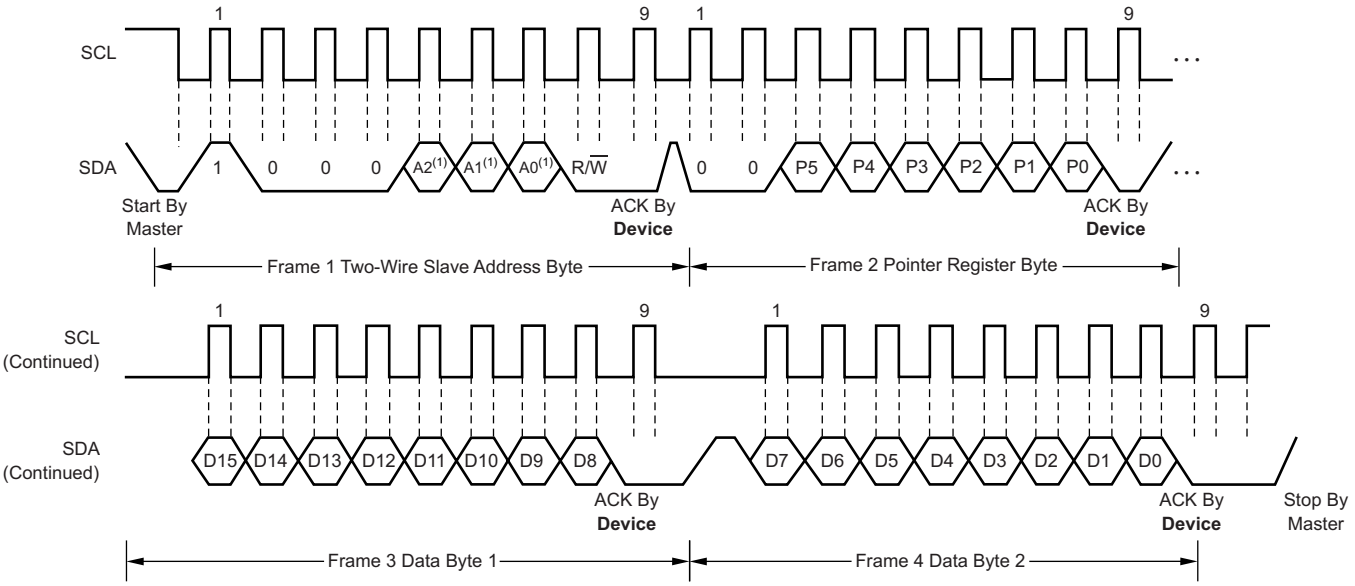

(1) The value of A2, A1, and A0 are determined by the ADR1 and ADR0 pins.

Figure 24. Two-Wire Timing Diagram for Write Word Format

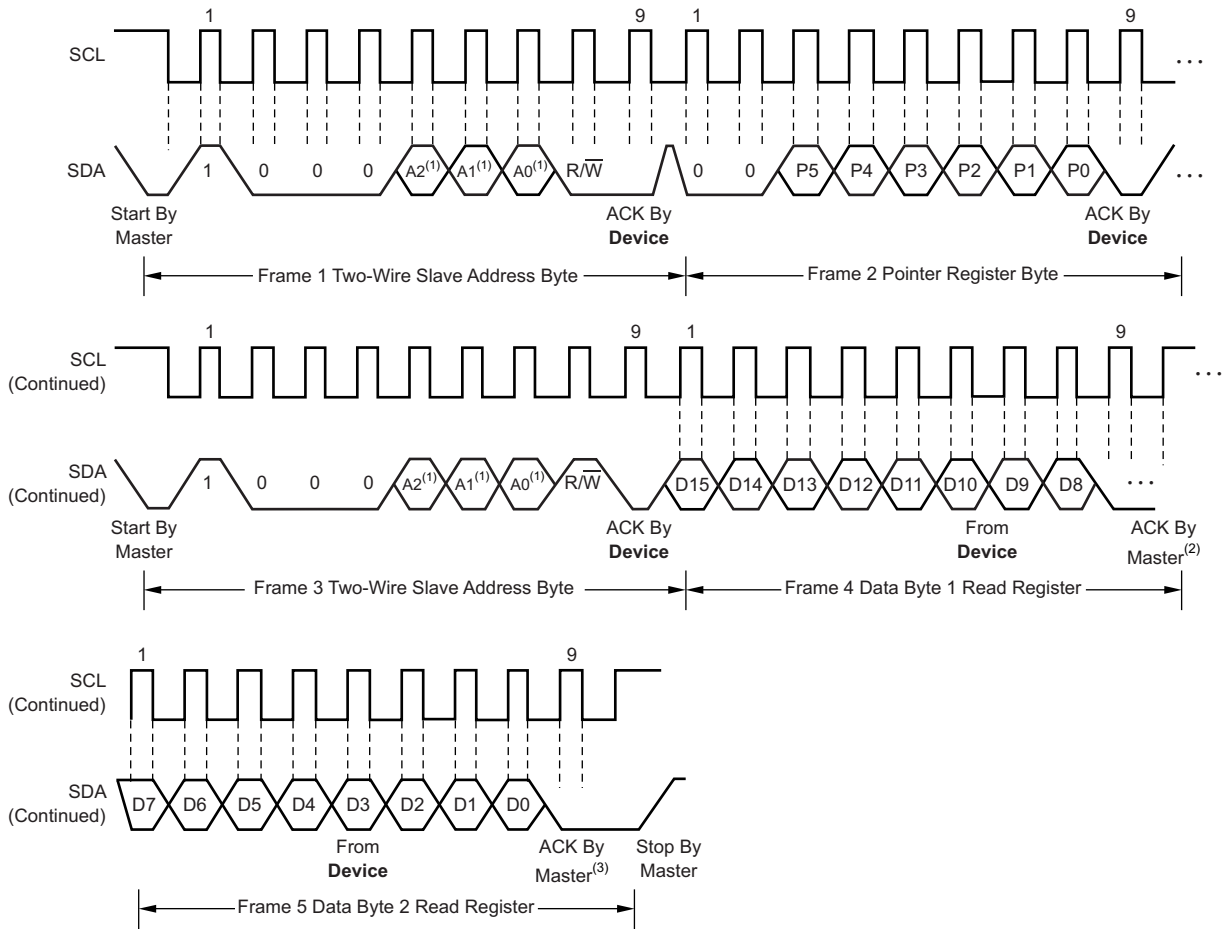

(1) The value of A0, A1, and A2 are determined by the connections of the corresponding pins.

(2) Master should leave SDA high to terminate a single-byte read operation.

(3) Master should leave SDA high to terminate a two-byte read operation.

Figure 25. Two-Wire Timing Diagram for Read Word Format

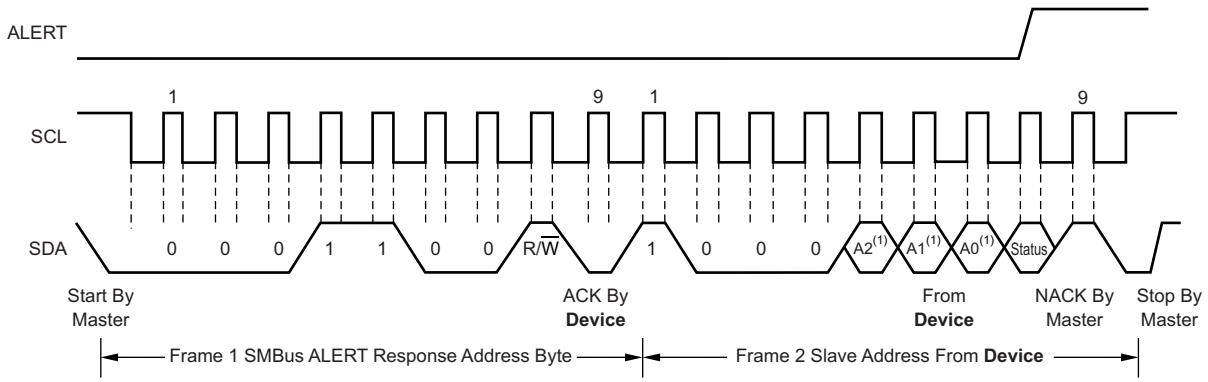

(1) The value of A0, A1, and A2 are determined by the connections of the corresponding pins.

Figure 26. Timing Diagram for SMBus Alert

Copyright © 2014–2015, Texas Instruments Incorporated

7.4 Device Functional Modes

7.4.1 Temperature Transient Correction

Because the measured object temperature depends on T_{DIE}, transient thermal events that change the die temperature affect the measurement. To compensate for this effect, the TMP007 math engine incorporates a transient correction option for use in applications where a thermal transient is anticipated. When transient correction is turned on, a filter with programmable coefficients is used to modify the sensor voltage result before the object temperature is calculated. This function helps reduce the jump in the object temperature result when there are large transients of the local die temperature, T_{DIE}. The compensation incorporates the rate of change of T_{DIE} and of V_{OBJ}. The modified value for the sensor voltage used in V_{SENSOR} to calculate the object temperature is shown in Equation 9:

$$V_{OBJ} = V_{OBJ_Measured} + TC0 \times T_{DIE_SLOPE} + TC1 \times V_{OBJ_SLOPE}$$

where

- TC0 and TC1 are weighting coefficients programmable using the registers.
- T_{DIE_SLOPE} is the change in die temperature with time.
- V_{OBJ_SLOPE} is the change in sensor voltage with time. (9)

As a general guideline, turn on transient correction when the local temperature is changing at a rate greater than 1.5°C/min. When transient correction is on, the function corrects transients up to approximately 20°C/min.

Turning on the transient correction also turns on the output filter shown in Equation 10:

$$T_{OBJ_FINAL[n]} = T_{OBJ[n]} \times 0.2 + T_{OBJ_FINAL[n-1]} \times 0.8 \quad (10)$$

If only the use of the output filter is desired without the input transient correction arithmetic, set the TC0 and TC1 coefficient values to 0 with TC bit in configuration register set to 1. When transition correction is on, the response to a step change has a time constant of approximately five times the sampling time.

When transient correction is on, the math engine modifies the sensor voltage result based on the transient correction equations. The nonmodified sensor voltage can be recovered with TC on by setting the TC1 and TC0 coefficients to 0. The output filtering cannot be turned off with TC bit set to 1.

7.4.2 Alert Modes: Interupt (INT) and Comparator (COMP)

The INT mode maintains the alert condition until a host controller clears the alert condition by reading the status register. This mode is useful when an external microcontroller is actively monitoring TMP007 as part of a thermal management system. The COMP mode asserts the $\overline{ALERT}$ pin and flags whenever the alert condition occurs, and deasserts the $\overline{ALERT}$ pin and flags without external intervention when the alert condition is no longer present This mode is often used to notify an external agent of an alert condition.

When servicing an alert from the TMP007, in some cases it may be useful to validate the alert condition by checking the status of the nDV, MEM_CRPT, and DATA_OVF flags.

Device Functional Modes (continued)

7.4.2.1 INT Mode (INT/COMP = 0)

In this mode the high and low limits form a limit window. The ALRTEN bit must be asserted if the $\overline{\text{ALERT}}$ pin functionality is desired. If the calculated temperature is above the high limit or below the low limit at the end of a conversion its respective enabled flag is asserted.

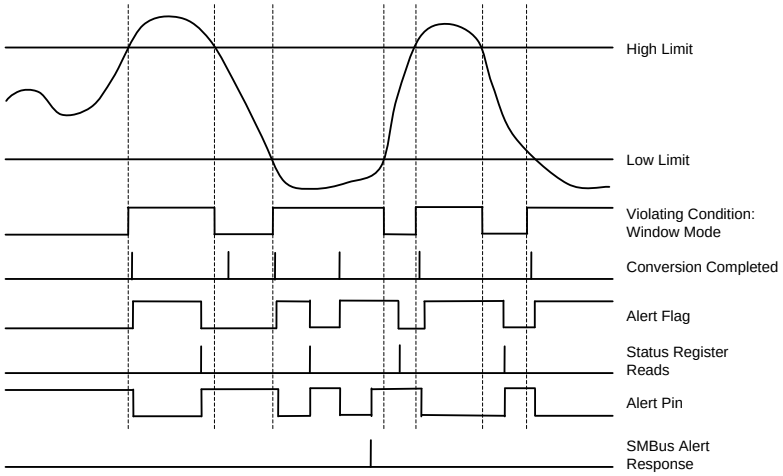

Figure 27. INT Mode

After the flag is asserted, it can only be cleared by a read of the status register, which clears the flag and the pin. The $\overline{\text{ALERT}}$ pin can also be cleared by the SMB alert response command (see the *SMBus Alert Function* section); however, this action does not clear the flag.

7.4.2.2 COMP Mode (INT/COMP = 1)

In COMP mode, the limits are used to form an upper limit threshold detector. If the calculated temperature is above the high limit, the high limit flag is asserted. The high limit flag is then deasserted only after the temperature goes below the low limit. The low limit register value determines the degree of hysteresis in the COMP function. In COMP mode, only the high limit enable has effect on the limit flags. The low limit enable flag does not have any effect on the low limit flags and the low limit flags always read 0. In this mode, the flags are asserted and deasserted only at the end of a conversion and cannot be cleared by a status register read or an SMB alert response.

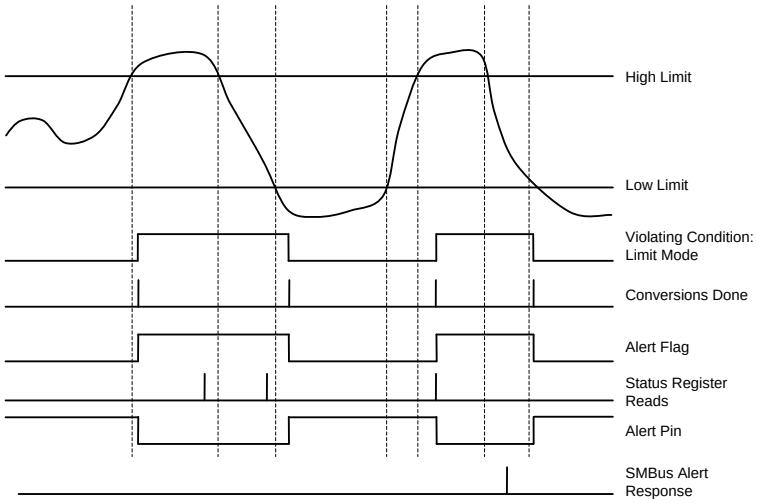

Figure 28. COMP Mode

Copyright © 2014–2015, Texas Instruments Incorporated

Device Functional Modes (continued)

7.4.3 Nonvolatile Memory Description

7.4.3.1 Programming the Nonvolatile Memory

The TMP007 has an internal memory that can be programmed eight times. This internal memory stores power-on reset (POR) values for all writeable registers in the register map. The default POR values for each register are used if their memory location has not been overwritten through the I^2C interface. The stored values in memory are loaded at power up, software reset, general load command, single load command, or SMBus general call reset.

On a memory store, bits NWr2:0 are incremented and indicate the number of writes remaining, as described in Table 6. Note the ambiguity in condition for code 000. Every memory location is individually writable, and the value returned for NWr depends on how many times that individual memory location has previously been written.

Table 6. Number of Writes Remaining to Nonvolatile Memory

NWr_2	NWR_1	NWR_0	TOTAL NUMBER WRITES PERFORMED	TOTAL NUMBER OF WRITES REMAINING
0	0	0	0	8
0	0	0	1	7
0	0	1	2	6
0	1	0	3	5
0	1	1	4	4
1	0	0	5	3
1	0	1	6	2
1	1	0	7	1
1	1	1	8	0

To program the memory, write the desired value in the appropriate register address. Then write to the memory access register (2Ah) with 6Ah in the MSB (B15:B8), the 5-bit register address in B7:B3, and 1 in B1 (the single write bit in the same write operation). If 6Ah prefix code is not written, then the write operation is ignored. A sample flow is shown in Figure 29.

Figure 29. Sample Flow

Write Value to Target Register

Write to Memory Access Register Address 2Ah

2Ah Bit	15	14	13	12	11	10	9	8	7	6	5	4	3	2	1	0
Name	NWr_2	NWr_1	NWr_0	Mem. Crpt	–	–	–	–	Adr4	Adr3	Adr2	Adr1	Adr0	Gen Load	MEM Store	Sin Load.
Value	0	1	1	0	1	0	1	0	A4	A3	A2	A1	A0	0	1	0

Clear Target Register

Write to Memory Access Register (2Ah) to Load Value from Memory to Target Register

2Ah Bit	15	14	13	12	11	10	9	8	7	6	5	4	3	2	1	0
Name	NWr_2	NWr_1	NWr_0	Mem. Crpt	–	–	–	–	Adr4	Adr3	Adr2	Adr1	Adr0	Gen Load	MEM Store	Sin Load.
Value	0	1	1	0	1	0	1	0	A4	A3	A2	A1	A0	0	0	1

Read Target Register to Verify Programming

7.4.3.2 Memory Store and Register Load From Memory

The internal memory is accessed and the contents transferred to the registers on power up, single load, general load and reset operations. The transfer from internal memory to the registers takes 3 ms, during which the serial interface is disabled.

The serial interface does not acknowledge while the memory values are being loaded to the registers, and the device stops any data conversions in progress. The loaded values programmed in the register can be overwritten through the serial bus after the load. General load can be used to load all the registers from memory values at once. The NWr bits indicate the number of times a particular memory location has been written to. It is important to note that after a value has been overwritten in the memory, previous values are no longer accessible. Only the most recently written value is transferred from the memory to the register or registers.

7.5 Register Maps

The TMP007 registers contain the results of measurements, status information, temperature limit information for setting alert thresholds for both interrupt and compare modes, and the values of the coefficients and parameters currently being used.

Table 7. Internal Register Description

REGISTER ADDRESS	RESET VALUE	REGISTER NAME	REGISTER DESCRIPTION
00h	0000h	V_{SENSOR} sensor voltage result	Sensor voltage result register
01h	0000h	T_{DIE} local temperature result	T_{DIE} local temperature result register
02h	1440h	Configuration	Configuration register
03h	0000h	T_{OBJ} object temperature result	T_{OBJ} object temperature result register
04h	0000h	Status	Status register
05h	0000h	Status mask and enable	Mask and enable register
06h	7FC0h	T_{OBJ} object temperature high-limit	T_{OBJ} object temperature high-limit register
07h	8000h	T_{OBJ} object temperature low-limit	T_{OBJ} object temperature low-limit register
08h	7FC0h	T_{DIE} local temperature high-limit	T_{DIE} temperature high-limit register
09h	8000h	T_{DIE} local temperature low-limit	T_{DIE} temperature low-limit register
0Ah	260Eh	S0 coefficient	S0 coefficient register
0Bh	0106h	A1 coefficient	A1 coefficient register
0Ch	FF9Bh	A2 coefficient	A2 coefficient register
0Dh	FF3Ah	B0 coefficient	B0 coefficient register
0Eh	FF71h	B1 coefficient	B1 coefficient register
0Fh	0553h	B2 coefficient	B2 coefficient register
10h	0000h	C2 coefficient	C2 coefficient register
11h	0034h	TC0 coefficient	TC0 coefficient register
12h	0000h	TC1 coefficient	TC1 coefficient register
1Eh	5449h	Manufacturer ID	Manufacturer ID register
1Fh	0078h	Device ID	Device ID register
2Ah	0E00h	Memory access	Memory access register

Copyright © 2014–2015, Texas Instruments Incorporated

Table 8. Register Map

REGISTER DESCRIPTION	ADDR	R/W	BIT DESCRIPTION															
V_{SENSOR} sensor voltage result	00h	R	V15	V14	V13	V12	V11	V10	V9	V8	V7	V6	V5	V4	V3	V2	V1	V0
T_{DIE} local temperature result	01h	R	T13	T12	T11	T10	T9	T8	T7	T6	T5	T4	T3	T2	T1	T0	—	—
Configuration	02h	R/W	RST	—	—	MOD	CR2	CR1	CR0	ALRTEN	ALRTF	TC	INT/ COMP	—	—	—	—	—
T_{OBJ} object temperature result	03h	R	T13	T12	T11	T10	T9	T8	T7	T6	T5	T4	T3	T2	T1	T0	—	nDV
Status	04h	R	ALRTF	CRTF	OHF	OLF	AHF	ALF	nDVF	Mem Crpt	DATA_ OVF	—	—	—	—	—	—	—
Status mask and enable	05h	R/W	ALRTEN	CRTEN	OHEN	OLEN	LHEN	LLEN	DVEN	MEM_ C_EN	—	—	—	—	—	—	—	—
T_{OBJ} object temperature high-limit	06h	R/W	T9	T8	T7	T6	T5	T4	T3	T2	T1	T0	—	—	—	—	—	—
T_{OBJ} object temperature low-limit	07h	R/W	T9	T8	T7	T6	T5	T4	T3	T2	T1	T0	—	—	—	—	—	—
T_{DIE} local temperature high-limit	08h	R/W	T9	T8	T7	T6	T5	T4	T3	T2	T1	T0	—	—	—	—	—	—
T_{DIE} local temperature low-limit	09h	R/W	T9	T8	T7	T6	T5	T4	T3	T2	T1	T0	—	—	—	—	—	—
S0 coefficient	0Ah	R/W	S0_15	S0_	S0_13	S0_12	S0_11	S0_10	S0_9	S0_8	S0_7	S0_6	S0_5	S0_4	S0_3	S0_2	S0_1	S0_0
A1 coefficient	0Bh	R/W	A1_15	A1_14	A1_13	A1_12	A1_11	A1_10	A1_9	A1_8	A1_7	A1_6	A1_5	A1_4	A1_3	A1_2	A1_1	A1_0
A2 coefficient	0Ch	R/W	A2_15	A2_14	A2_13	A2_12	A2_11	A2_10	A2_9	A2_8	A2_7	A2_6	A2_5	A2_4	A2_3	A2_2	A2_1	A2_0
B0 coefficient	0Dh	R/W	B0_15	B0_14	B0_13	B0_12	B0_11	B0_10	B0_9	B0_8	B0_7	B0_6	B0_5	B0_4	B0_3	B0_2	B0_1	B0_0
B1 coefficient	0Eh	R/W	B1_15	B1_14	B1_13	B1_12	B1_11	B1_10	B1_9	B1_8	B1_7	B1_6	B1_5	B1_4	B1_3	B1_2	B1_1	B1_0
B2 coefficient	0Fh	R/W	B2_15	B2_14	B2_13	B2_12	B2_11	B2_10	B2_9	B2_8	B2_7	B2_6	B2_5	B2_4	B2_3	B2_2	B2_1	B2_0
C2 coefficient	10h	R/W	C_11	C_10	C_9	C_8	C_7	C_6	C_5	C_4	C_3	C_2	C_1	C_0	—	—	—	—
TC0 coefficient	11h	R/W	TC0_15	TC0_14	TC0_13	TC0_12	TC0_11	TC0_10	TC0_9	TC0_8	TC0_7	TC0_6	TC0_5	TC0_4	TC0_3	TC0_2	TC0_1	TC0_0
TC1 coefficient	12h	R/W	TC1_15	TC1_14	TC1_13	TC1_12	TC1_11	TC1_10	TC1_9	TC1_8	TC1_7	TC1_6	TC1_5	TC1_4	TC1_3	TC1_2	TC1_1	TC1_0
Manufacturer ID	1Eh	R	ID15	ID14	ID13	ID12	ID11	ID10	ID9	ID8	ID7	ID6	ID5	ID4	ID3	ID2	ID1	ID0
Device ID	1Fh	R	DID11	DID10	DID9	DID8	DID7	DID6	DID5	DID4	DID3	DID2	DID1	DID0	RID3	RID2	RID1	RID0
Memory Access	2Ah	R/W	nwR_2	nwR_1	nwR_0	Mem Crpt	—	—	—	—	Adr4	Adr3	Adr2	Adr1	Adr0	General Load	Mem Store	Single Load

Copyright © 2014–2015, Texas Instruments Incorporated

7.5.1 Sensor Voltage Result Register (address = 00h) [reset = 0000h]

Figure 30. Sensor Voltage Result Register

15	14	13	12	11	10	9	8	7	6	5	4	3	2	1	0
V15	V14	V13	V12	V11	V10	V9	V8	V7	V6	V5	V4	V3	V2	V1	V0
R-0	R-0	R-0	R-0	R-0	R-0	R-0	R-0	R-0	R-0	R-0	R-0	R-0	R-0	R-0	R-0

LEGEND: R/W = Read/Write; R = Read only; -n = value after reset

V15 to V0 : Sensor Voltage Result. Bits 15:0
Range: ±5.12 mV
Resolution: 156.25 nV/LSB

This is the digitized IR sensor voltage output in twos complement format.

7.5.2 T_{DIE} Local Temperature Result Register (address = 01h) [reset = 0000h]

Figure 31. T_{DIE} Local Temperature Result Register

15	14	13	12	11	10	9	8	7	6	5	4	3	2	1	0
T13	T12	T11	T10	T9	T8	T7	T6	T5	T4	T3	T2	T1	T0	0	0
R-0	R-0	R-0	R-0	R-0	R-0	R-0	R-0	R-0	R-0	R-0	R-0	R-0	R-0	R-0	R-0

LEGEND: R/W = Read/Write; R = Read only; -n = value after reset

T13 to T0: Temperature result. Bits 15 to 2.

The data format is 14 bits, 0.03125°C per LSB in twos complement format. Full scale allows a result of up to ±256°C. Reset value is 00h.

7.5.3 Configuration Register (address = 02h) [reset = 1440h]

Figure 32. Configuration Register

15	14	13	12	11	10	9	8	7	6	5	4	3	2	1	0
RST	—	—	MOD	CR2	CR1	CR0	ALRTEN	ALRTF	TC	INT/ COMP	—	—	—	—	—
R/W-0	R/W-0	R/W-0	R/W-1	R/W-0	R/W-1	R/W-0	R/W-0	R/W-0	R/W-1	R/W-0	R/W-0	R/W-0	R/W-0	R/W-0	R/W-0

LEGEND: R/W = Read/Write; R = Read only; -n = value after reset

Note: Writing to the Configuration register will restart the ADC conversion (unless the write is to put the device in shutdown mode)

RST: Software Reset Bit. Bit 15 (Write Only)
Writing 1 to this bit generates a system reset that is the same as power on reset. It will reset all registers to default values including configuration register. This bit self-clears. Any conversion in progress is terminated.

MOD: Conversion Mode Select, Bit 12 (Read/Write)

Mode	MOD
Power Down	0
Conversion ON	1 (default)

Selects the conversion mode of the device.

CR2 to CR0: Conversion Rate/Averaging Mode Bits. Bits 11 to 9
Controls the Number of conversions used to generate the value in the V_{Sensor} and T_{DIE} registers.
There are a number of conversion modes available.

CR2	CR1	CR0	NUMBER OF AVERAGES PER CONVERSION	TOTAL CONVERSION TIME (s)	I_Q µA AVERAGE
0	0	0	1	0.26	270
0	0	1	2	0.51	270
0	1	0	4 (default)	1.01	270
0	1	1	8	2.01	270
1	0	0	16	4.01	270
1	0	1	1	1.0 (Idle for 0.75)	85
1	1	0	2	4.0 (Idle for 3.5)	60
1	1	1	4	4.0 (Idle for 3.0)	85

Copyright © 2014–2015, Texas Instruments Incorporated

ALRTEN: Alert Pin Enable. Bit 8
Makes $\overline{\text{ALERT}}$ pin controlled by the alert flag bit. The $\overline{\text{ALERT}}$ pin is active low. The ALRTEN bit is mirrored in the status mask and enable register. Writing to the ALRTEN bit in the status mask and enable register also sets this bit, and vice versa.

ALRTF: Cumulative Alert Flag. Bit 7 (Read Only)
This flag is the logical OR of all enabled flags, and is cleared when the status register is read in INT mode or at the end of a conversion when all enabled flags are 0 in COMP mode.
It is mirrored in Status register.

TC: Transient Correction Enable. Bit 6
Setting this bit turns on the transient correction enabling sensor voltage and object temperature output filtering.

INT/COMP: INT/COMP Mode. Bit 5
The INT/COMP bit controls whether the limit flags are in INTERRUPT (INT) Mode (0) or COMPARATOR (COMP) Mode (1). It controls the behavior of the limit flags (LH, LL, OH, OL) and the data invalid flag (nDVF) from the status register.

7.5.4 T_{OBJ} Object Temperature Result Register (address = 03h) [reset = 0000h]

Figure 33. T_{OBJ} Object Temperature Result Register

15	14	13	12	11	10	9	8	7	6	5	4	3	2	1	0
T13	T12	T11	T10	T9	T8	T7	T6	T5	T4	T3	T2	T1	T0	—	nDV
R-0	R-0	R-0	R-0	R-0	R-0	R-0	R-0	R-0	R-0	R-0	R-0	R-0	R-0	R-0	R-0

LEGEND: R/W = Read/Write; R = Read only; -n = value after reset

T13 to T0: Temperature result. Bits 15 to 2
The data format is twos complement, 14 bits, and 0.03125°C per LSB. Full scale allows a result of up to ±256°C. Reset value is 00h.

nDV: Data invalid bit. Bit 0
If this bit is set, it indicates that the calculated object temperature is not valid due to invalid operations in the math engine. The bit is reset in the next valid conversion.

7.5.5 Status Register (address = 04h) [reset = 0000h]

The status register flags are activated whenever their limit is violated, and latch if the INT/COMP bit is in INT mode (see configuration register). In INT mode these flags are cleared only when the status register is read. If the flag is set from a previous conversion, and at the end of the next conversion, the corresponding limit is not violating anymore, the flag is not cleared when in INT mode. In COMP mode, these flags are set whenever the corresponding limit is violated at the end of a conversion, and cleared if they are not.

Figure 34. Status Register

15	14	13	12	11	10	9	8	7	6	5	4	3	2	1	0
ALRTF	CRTF	OHF	OLF	LHF	LLF	nVDF	MCRPT	SNRL	—	—	—	—	—	—	—
R-0	R-0	R-0	R-0	R-0	R-0	R-0	R-0	R-0	R-0	R-0	R-0	R-0	R-0	R-0	R-0

LEGEND: R/W = Read/Write; R = Read only; -n = value after reset

ALRTF: Cumulative Alert Flag Bit. Bit 15
This flag is the logical OR of all enabled flags, and is cleared when the status register is read in INT mode or at the end of a conversion when all enabled flags are 0 in COMP mode.

CRTF: Conversion Ready Flag. Bit 14
The conversion ready flag is provided to help coordinate one-shot conversions for temperature measurements. The bit is set after the local and object temperature conversions have completed and the results are ready to be read in the result registers. This flag can be cleared by reading the status register, writing to the configuration register or reading any of the results registers (T_{DIE}, T_{OBJ}, and so on). This flag is not affected by the INT/COMP bit setting and is always in latched mode.

OHF: Object Temperature High Limit Flag. Bit 13
This bit is set to 1 if the result in the object temperature register exceeds the value in the object temperature high limit register. In INT mode, this bit is cleared when the status register is read.

OLF: Object Temperature Low Limit Flag. Bit 12
This bit is set to 1 if the result in the object temperature register is less than the value in the object temperature low limit register. In INT mode, this bit is cleared when the status register is read. In COMP mode, this bit is disabled and always reads 0.

LHF: Local Temperature (T_{DIE}) High Limit Flag. Bit 11
This bit is set to 1 if the result in the T_{DIE} local temperature result register exceeds the value in the local temperature high limit register. In COMP mode, the bit is cleared to 0 when the result in the T_{DIE} local temperature result register is less than the object temperature low limit. In INT mode, the bit is cleared when the status register is read.

Copyright © 2014–2015, Texas Instruments Incorporated

LLF: Local Temperature (T_{DIE}) Low Limit Flag. Bit 10
This bit is set to 1 if the result in the T_{DIE} local temperature result register goes below the value in the local temperature low limit register. In INT mode, the bit is cleared when the status register is read. In COMP mode, the bit is disabled and always reads 0.

nDVF: Data Invalid Flag. Bit 9
If the calculated object temperature is invalid due to an internal error in the math engine or if sensor voltage is out of range, then Data invalid flag is set. In INT mode, this flag can only be cleared by reading the status register. In COMP mode it is cleared at the end of the conversion if the calculated object temperature and sensor voltage are valid.

MCRPT: Memory Corrupt Flag. Bit 8.
This flag indicates an internal check on the memory failed. This check is automatically performed only on a general load of the registers from memory that is done right after a power on reset, general call reset, or software reset (RST bit in the configuration register), or by forcing loads through the memory access register. When this bit is set, it can only be cleared by a clean pass of the internal check on memory.
Mirror of this bit is in memory access register, bit 12.

DOF: IR Data Overflow DATA_OVF Flag: Bit 7.
This flag indicates if sensor voltage measured is over range. Combined with the data invalid bit, it tells why data is invalid.

Bits 6 to 0: Not used. These bits always read 0.

7.5.6 Status Mask and Enable Register (address = 05h) [reset = 0000h]

Figure 35. Status Mask and Enable Register

15	14	13	12	11	10	9	8	7	6	5	4	3	2	1	0
ALRTEN	CRTEN	OHEN	OLEN	LHEN	LLEN	DVEN	MEM_C_EN	—	—	—	—	—	—	—	—
R/W-0	R/W-0	R/W-0	R/W-0	R/W-0	R/W-0	R/W-0	R/W-0	R/W-0	R/W-0	R/W-0	R/W-0	R/W-0	R/W-0	R/W-0	R/W-0

LEGEND: R/W = Read/Write; R = Read only; -n = value after reset

ALRTEN: Alert Flag Enable Bit. Bit 15
0: ALRTF flag in status register cannot activate $\overline{\text{ALERT}}$ pin.
1: ALRTF flag any enabled flag in Status register will activate $\overline{\text{ALERT}}$ pin.
Can also be set by its mirror in Configuration register, bit 8.

CRTEN: Temperature Conversion Ready Enable Bit. Bit 14
0: CRTF flag in status register cannot activate ALRTF
1: CRTF flag in Status register will activate ALRTF.

OHEN: Object Temperature High Limit Enable Bit. Bit 13
0: OHF flag in Status register cannot activate ALRTF.
1: OHF flag in Status register will activate ALRTF.

OLEN: Object Temperature Low Limit Enable Bit. Bit 12
INT Mode:
0: OLF flag in Status register cannot activate ALRTF.
1: OLF flag in Status register will activate ALRTF.
COMP Mode: This bit is disabled in COMP mode and will always read 0.

LHEN: T_{DIE} Temperature High Limit Enable Bit. Bit 11
0: AHF flag in Status register cannot activate ALRTF.
1: AHF flag in Status register will activate ALRTF in INT mode

LLEN: T_{DIE} Temperature Low Limit Enable Bit. Bit 10
INT Mode (Alert Mode):
0: ALF flag in Status register cannot activate ALRTF.
1: ALF flag in Status register will activate ALRTF in INT mode
COMP Mode: This bit is disabled in COMP mode and always read 0.

DVEN: Data invalid Flag Enable Bit. Bit 9
0: Data invalid Flag in Status register cannot activate ALRTF.
1: Data invalid Flag in Status register will activate ALRTF.

MEM_C_EN: Memory Corrupt Enable Bit. Bit 8
0: Memory Corrupt flag in Status register cannot activate ALRTF.
1: Memory Corrupt flag in Status register will activate ALRTF.

Copyright © 2014–2015, Texas Instruments Incorporated

7.5.7 T_{OBJ} Object Temperature High-Limit Register (address = 06h) [reset = 7FC0h]

Figure 36. T_{OBJ} Object Temperature High-Limit Register

15	14	13	12	11	10	9	8	7	6	5	4	3	2	1	0
T9	T8	T7	T6	T5	T4	T3	T2	T1	T0	—	—	—	—	—	—
R/W-0	R/W-1	R/W-1	R/W-1	R/W-1	R/W-1	R/W-1	R/W-1	R/W-1	R/W-1	R/W-0	R/W-0	R/W-0	R/W-0	R/W-0	R/W-0

LEGEND: R/W = Read/Write; R = Read only; -n = value after reset

T9 to T0: Object Temperature High Limit. Bits 15 to 6
The data format is 10 bits, 0.5°C per bit. Full scale allows a result of up to ±256C. Twos complement data.

Bits 5 to 0: Not used; these bits always read 0.

7.5.8 T_{OBJ} Object Temperature Low-Limit Register (address = 07h) [reset = 8000h]

Figure 37. T_{OBJ} Object Temperature Low-Limit Register

15	14	13	12	11	10	9	8	7	6	5	4	3	2	1	0
T9	T8	T7	T6	T5	T4	T3	T2	T1	T0	—	—	—	—	—	—
R/W-1	R/W-0	R/W-0	R/W-0	R/W-0	R/W-0	R/W-0	R/W-0	R/W-0	R/W-0	R/W-0	R/W-0	R/W-0	R/W-0	R/W-0	R/W-0

LEGEND: R/W = Read/Write; R = Read only; -n = value after reset

T9 to T0: Object Temperature Low Limit. Bits 15 to 6
The data format is 10 bits, 0.5°C per bit. Full scale allows a result of up to ±256C. Twos complement data.

Bits 5 to 0: Not used; these bits always read 0.

7.5.9 T_{DIE} Local Temperature High-Limit Register (address = 08h) [reset = 7FC0h]

Figure 38. T_{DIE} Local Temperature High-Limit Register

15	14	13	12	11	10	9	8	7	6	5	4	3	2	1	0
T9	T8	T7	T6	T5	T4	T3	T2	T1	T0	—	—	—	—	—	—
R/W-0	R/W-1	R/W-1	R/W-1	R/W-1	R/W-1	R/W-1	R/W-1	R/W-1	R/W-1	R/W-0	R/W-0	R/W-0	R/W-0	R/W-0	R/W-0

LEGEND: R/W = Read/Write; R = Read only; -n = value after reset

T9 to T0: T_{DIE} Temperature High Limit. Bits 15 to 6
The data format is 10 bits with LSB of 0.5°C. Full scale allows a result of up to ±256C. Twos complement data.

Bits 5 to 0: Not used; these bits always read 0.

7.5.10 T_{DIE} Local Temperature Low-Limit Register (address = 09h) [reset = 8000h]

Figure 39. T_{DIE} Local Temperature Low-Limit Register

15	14	13	12	11	10	9	8	7	6	5	4	3	2	1	0
T9	T8	T7	T6	T5	T4	T3	T2	T1	T0	—	—	—	—	—	—
R/W-1	R/W-0	R/W-0	R/W-0	R/W-0	R/W-0	R/W-0	R/W-0	R/W-0	R/W-0	R/W-0	R/W-0	R/W-0	R/W-0	R/W-0	R/W-0

LEGEND: R/W = Read/Write; R = Read only; -n = value after reset

T9 to T0: T_{DIE} Temperature Low Limit. Bits 15 to 6.
The data format is 10 bits with LSB of 0.5°C. Full scale allows a result of up to ±256C. Twos complement data.

Bits 5 to 0: Not used; these bits always read 0.

Copyright © 2014–2015, Texas Instruments Incorporated

7.5.11 Coefficient Registers

The values of the coefficient registers described above are used in the math engine. The range and resolution of the coefficients are shown in Table 9. The default coefficients, TC0 and TC1, are optimized for the default conversion mode (four averages per measurement). Different acquisition modes may require different values for the TC0 and TC1 coefficients.

Table 9. Coefficient Range and Resolution(1)

REGISTER ADDRESS	VARIABLE	BITS	RANGE	RESOLUTION	DEFAULT VALUES	HEX DEFAULT VALUES
0A	S0	16	0 – 298E-15	LSB = 4.5475E-18	4.430E-14	0260Eh
0B	A1	16	±125E-3	LSB = 3.8150E-06	9.995E-04	0106h
0C	A2	16	±1.9E-3	LSB = 5.9600E-08	–6.020E-06	FF9Bh
0D	B0	16	±5.12E-3	LSB = 1.5625E-07	–3.094E-05	FF3Ah
0E	B1	16	±20E-6	LSB = 6.1035E-10	–8.728E-08	FF71h
0F	B2	16	±312E-9	LSB = 9.5367E-12	1.300E-08	0553h
10	C2	12	±97.65	LSB = 4.7680E-02	0	0000h
11	TC0	16	±163E-3	LSB = 5.0000E-06	2.600E-04	0034h
12	TC1	16	±1024	LSB = 3.1250E-02	0	0000h

(1) All signed values are twos complement data.

7.5.11.1 S0 Coefficient Register (address = 0Ah) [reset = 260Eh]

Figure 40. S0 Coefficient Register

15	14	13	12	11	10	9	8	7	6	5	4	3	2	1	0
S0_15	S0_14	S0_13	S0_12	S0_11	S0_10	S0_9	S0_8	S0_7	S0_6	S0_5	S0_4	S0_3	S0_2	S0_1	S0_0
R/W-0	R/W-0	R/W-1	R/W-0	R/W-0	R/W-1	R/W-1	R/W-0	R/W-0	R/W-0	R/W-0	R/W-0	R/W-1	R/W-1	R/W-1	R/W-0

LEGEND: R/W = Read/Write; R = Read only; -n = value after reset

S0_15 to S0_0: S0 Coefficient Value. Bits 15 to 0.
Range and resolution given in Table 9

7.5.11.2 A1 Coefficient Register (address = 0Bh) [reset = 0106h]

Figure 41. A1 Coefficient Register

15	14	13	12	11	10	9	8	7	6	5	4	3	2	1	0
A1_15	A1_14	A1_13	A1_12	A1_11	A1_10	A1_9	A1_8	A1_7	A1_6	A1_5	A1_4	A1_3	A1_2	A1_1	A1_0
R/W-0	R/W-0	R/W-0	R/W-0	R/W-0	R/W-0	R/W-0	R/W-1	R/W-0	R/W-0	R/W-0	R/W-0	R/W-0	R/W-1	R/W-1	R/W-0

LEGEND: R/W = Read/Write; R = Read only; -n = value after reset

A1_15 to A1_0: A1 Coefficient Value. Bits 15 to 0.
Twos complement format. Range and resolution given in Table 9

7.5.11.3 A2 Coefficient Register (address = 0Ch) [reset = FF9Bh]

Figure 42. A2 Coefficient Register

15	14	13	12	11	10	9	8	7	6	5	4	3	2	1	0
A2_15	A2_14	A2_13	A2_12	A2_11	A2_10	A2_9	A2_8	A2_7	A2_6	A2_5	A2_4	A2_3	A2_2	A2_1	A2_0
R/W-1	R/W-1	R/W-1	R/W-1	R/W-1	R/W-1	R/W-1	R/W-1	R/W-1	R/W-0	R/W-0	R/W-1	R/W-1	R/W-0	R/W-1	R/W-1

LEGEND: R/W = Read/Write; R = Read only; -n = value after reset

A2_15 to A2_0: A2 Coefficient Value. Bits 15 to 0
Twos complement format. Range and resolution given in Table 9

Copyright © 2014–2015, Texas Instruments Incorporated

7.5.11.4 B0 Coefficient Register (address = 0Dh) [reset = FF3Ah]

Figure 43. B0 Coefficient Register

15	14	13	12	11	10	9	8	7	6	5	4	3	2	1	0
B0_15	B0_14	B0_13	B0_12	B0_11	B0_10	B0_9	B0_8	B0_7	B0_6	B0_5	B0_4	B0_3	B0_2	B0_1	B0_0
R/W-1	R/W-1	R/W-1	R/W-1	R/W-1	R/W-1	R/W-1	R/W-1	R/W-0	R/W-0	R/W-1	R/W-1	R/W-1	R/W-0	R/W-1	R/W-0

LEGEND: R/W = Read/Write; R = Read only; -n = value after reset

B0_15 to B0_0: B0 Coefficient Value. Bits 15 to 0
Twos complement format. Range and resolution given in Table 9

7.5.11.5 B1 Coefficient Register (address = 0Eh) [reset = FF71h]

Figure 44. B1 Coefficient Register

15	14	13	12	11	10	9	8	7	6	5	4	3	2	1	0
B1_15	B1_14	B1_13	B1_12	B1_11	B1_10	B1_9	B1_8	B1_7	B1_6	B1_5	B1_4	B1_3	B1_2	B1_1	B1_0
R/W-1	R/W-1	R/W-1	R/W-1	R/W-1	R/W-1	R/W-1	R/W-1	R/W-0	R/W-1	R/W-1	R/W-1	R/W-0	R/W-0	R/W-0	R/W-1

LEGEND: R/W = Read/Write; R = Read only; -n = value after reset

B1_15 to B1_0: B1 Coefficient Value. Bits 15 to 0
Twos complement format. Range and resolution given in Table 9

7.5.11.6 B2 Coefficient Register (address = 0Fh) [reset = 0553h]

Figure 45. B2 Coefficient Register

15	14	13	12	11	10	9	8	7	6	5	4	3	2	1	0
B2_15	B2_14	B2_13	B2_12	B2_11	B2_10	B2_9	B2_8	B2_7	B2_6	B2_5	B2_4	B2_3	B2_2	B2_1	B2_0
R/W-0	R/W-0	R/W-0	R/W-0	R/W-0	R/W-1	R/W-0	R/W-1	R/W-0	R/W-1	R/W-0	R/W-1	R/W-0	R/W-0	R/W-1	R/W-1

LEGEND: R/W = Read/Write; R = Read only; -n = value after reset

B2_15 to B2_0: B2 Coefficient Value. Bits 15 to 0
Twos complement format. Range and resolution given in Table 9

7.5.11.7 C2 Coefficient Register (address = 10h) [reset = 0000h]

Figure 46. C2 Coefficient Register

15	14	13	12	11	10	9	8	7	6	5	4	3	2	1	0
C2_11	C2_10	C2_9	C2_8	C2_7	C2_6	C2_5	C2_4	C2_3	C2_2	C2_1	C2_0	—	—	—	—
R/W-0	R/W-0	R/W-0	R/W-0	R/W-0	R/W-0	R/W-0	R/W-0	R/W-0	R/W-0	R/W-0	R/W-0	R/W-0	R/W-0	R/W-0	R/W-0

LEGEND: R/W = Read/Write; R = Read only; -n = value after reset

C2_11 to C2_0: C2 Coefficient Value. Bits 15 to 4
Twos complement format. Range and resolution given in Table 9

7.5.11.8 TC0 Coefficient Register (address = 11h) [reset = 0034h]

Figure 47. TC0 Coefficient Register

15	14	13	12	11	10	9	8	7	6	5	4	3	2	1	0
TC0_15	TC0_14	TC0_13	TC0_12	TC0_11	TC0_10	TC0_9	TC0_8	TC0_7	TC0_6	TC0_5	TC0_4	TC0_3	TC0_2	TC0_1	TC0_0
R/W-0	R/W-0	R/W-0	R/W-0	R/W-0	R/W-0	R/W-0	R/W-0	R/W-0	R/W-0	R/W-1	R/W-1	R/W-0	R/W-1	R/W-0	R/W-0

LEGEND: R/W = Read/Write; R = Read only; -n = value after reset

TC0_15 to TC0_0: TC0 Coefficient Value. Bits 15 to 0
Twos complement format. Range and resolution given in Table 9

7.5.11.9 TC1 Coefficient Register (address = 12h) [reset = 0000h]

Figure 48. TC1 Coefficient Register

15	14	13	12	11	10	9	8	7	6	5	4	3	2	1	0
TC1_15	TC1_14	TC1_13	TC1_12	TC1_11	TC1_10	TC1_9	TC1_8	TC1_7	TC1_6	TC1_5	TC1_4	TC1_3	TC1_2	TC1_1	TC1_0
R/W-0	R/W-0	R/W-0	R/W-0	R/W-0	R/W-0	R/W-0	R/W-0	R/W-0	R/W-0	R/W-0	R/W-0	R/W-0	R/W-0	R/W-0	R/W-0

LEGEND: R/W = Read/Write; R = Read only; -n = value after reset

TC1_15 to TC1_0: TC1 Coefficient Value. Bits 15 to 0
Twos complement format. Range and resolution given in Table 9

7.5.12 Manufacturer ID Register (address = 1Eh) [reset = 5449h]

Figure 49. Manufacturer ID Register

15	14	13	12	11	10	9	8	7	6	5	4	3	2	1	0
ID15	ID14	ID13	ID12	ID11	ID10	ID9	ID8	ID7	ID6	ID5	ID4	ID3	ID2	ID1	ID0
R-0	R-1	R-0	R-1	R-0	R-1	R-0	R-0	R-0	R-1	R-0	R-0	R-1	R-0	R-0	R-1

LEGEND: R/W = Read/Write; R = Read only; -n = value after reset

ID15 to ID0: Manufacturer ID Bits. Bits 15 to 0. Reads 'TI' in ASCII code.

7.5.13 Device ID Register (address = 1Fh) [reset = 0078h]

Figure 50. Device ID Register

15	14	13	12	11	10	9	8	7	6	5	4	3	2	1	0
DID11	DID10	DID9	DID8	DID7	DID6	DID5	DID4	DID3	DID2	DID1	DID0	RID3	RID2	RID1	RID0
R-0	R-0	R-0	R-0	R-0	R-0	R-0	R-0	R-0	R-1	R-1	R-1	R-1	R-0	R-0	R-0

LEGEND: R/W = Read/Write; R = Read only; -n = value after reset

DID11 to DID0: Device ID Bits. Bits 15 to 4. Reads 007h.
RID3 to RID0: Revision ID Bits. Bits 3 to 0. Reads 8h.

Copyright © 2014–2015, Texas Instruments Incorporated

7.5.14 Memory Access Register (address = 2Ah) [reset = 0000h]

The internal memory can be accessed through the memory access register. When the register is read, it returns the values in read name. When the register is written to, it must contain the value 6Axxh to enable the contents of the register specified by *Adr4 to Adr0* to be stored in memory.

Figure 51. Memory Access Register: Read

15	14	13	12	11	10	9	8	7	6	5	4	3	2	1	0
nwR_2	nwR_1	nwR_0	Mem Crpt	—	—	—	—	Adr4	Adr3	Adr2	Adr1	Adr0	0	0	0
R/W-0	R/W-0	R/W-0	R/W-0	R/W-0	R/W-0	R/W-0	R/W-0	R/W-0	R/W-0	R/W-0	R/W-0	R/W-0	R/W-0	R/W-0	R/W-0

LEGEND: R/W = Read/Write; R = Read only; -n = value after reset

Figure 52. Memory Access Register: Write

15	14	13	12	11	10	9	8	7	6	5	4	3	2	1	0
0	1	1	0	1	0	1	0	Adr4	Adr3	Adr2	Adr1	Adr0	General Load	Mem Store	Single Load
N/A	N/A	N/A	N/A	N/A	N/A	N/A	N/A	N/A	N/A	N/A	N/A	N/A	N/A	N/A	N/A

LEGEND: N/A = reset value not applicable for write operation.

nwR_2 to nwR_0: Number of Programs. Bits 15 to 13.
A memory location can be programmed a maximum of eight times. These bits contain the number of times this location has been programmed. After the eighth programming to a given location, subsequent attempts to program are ignored.

Mem Crpt: Memory Corrupt. Bit 12 (read only).
This bit is a mirror of bit 8 in the status register.

Adr4 to Adr0: Memory Address. Bits 7 to 3.
Used to specify register address to operate on. Address here is the same as the register in register address table..

General Load: General Load. Bit 2 (write only).
Loads all registers from memory with the last value stored in memory for that register. Adr[4:0] are don't care in this case.

Mem Store: Memory Store. Bit 1 (write only).
Write 1 to this bit along with the register address to store that registers contents to memory.

Single Load: Single Load. Bit 0.
Performs an load of the memory contents to the register address determined by the Adr[4:0] bits.

8 Application and Implementation

NOTE

Information in the following applications sections is not part of the TI component specification, and TI does not warrant its accuracy or completeness. TI's customers are responsible for determining suitability of components for their purposes. Customers should validate and test their design implementation to confirm system functionality.

8.1 Application Information

The TMP007 is a complete IR thermopile sensor system on a chip that includes the sensing element, signal conditioner, ADC, and math engine to calculate object and die temperatures. The TMP007 is ideal for applications where the object cannot be placed in thermal contact with a conventional temperature sensor. Common reasons for noncontact temperature sensing are:

- Distance; the object is too far away, or in an inconvenient location for wired connections.
- The object is in motion.
- Direct contact of the object is inconvenient or uncomfortable (for example, skin).
- The object is a fluid (that is, liquid or gas).
- The object is hazardous (for example, acid or flammable).
- The object is in a hazardous state (for example, high voltage).

8.2 Typical Applications

8.2.1 Wide-Range Calibration Example: T_{OBJ} = 0°C to 60°C, Common Versus Unit Calibration

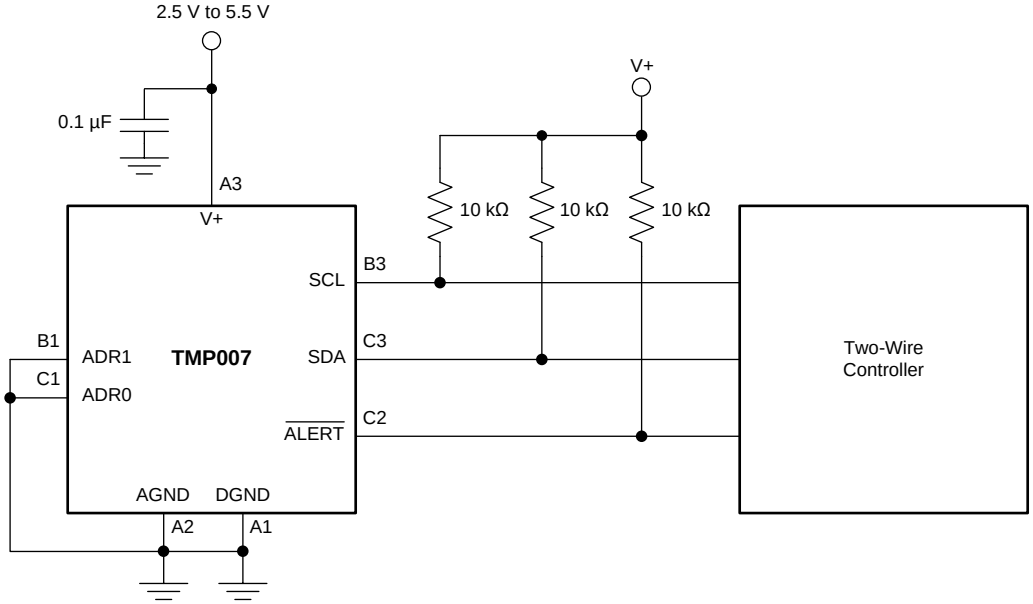

Figure 53. Typical Application Circuit

Copyright © 2014–2015, Texas Instruments Incorporated

Typical Applications (continued)

8.2.1.1 Design Requirements

For this application, the system must operate over the environment described in Table 10.

Table 10. Wide-Range Parameters

DESIGN PARAMETER	EXAMPLE VALUE	COMMENT
N	32	Number of devices in calibration set
Minimum T_{DIE}	0°C	Minimum expected die temperature
Maximum T_{DIE}	60°C	Maximum expected die temperature
Minimum T_{OBJ}	0°C	Minimum expected objected temperature
Maximum T_{OBJ}	60°C	Maximum expected object temperature
ε	0.95	Object emissivity
Field of view	110°	Field of view subtended by object
Conversion rate	1 sample/second	

Select a set of values for T_{DIE} and T_{OBJ} to generate the calibration set. At a minimum, include the four extreme points of the temperature ranges desired. In practice, it is best to include a number of intermediate points as well. This example uses the values shown in Table 11, with an X marking the values chosen for measurement.

Table 11. Wide-Range Measurement Values

	T_{DIE}			
T_{OBJ}	0°C	20°C	40°C	60°C
0°C	X	X	X	X
20°C	X	X	X	X
40°C	X	X	X	X
60°C	X	X	X	X

8.2.1.2 Detailed Design Procedure

Before attempting to calibrate the system, it is necessary to establish the stability of the system. Noise is a measure of precision, which is the random deviation from the mean of the distribution. For a Gaussian (or normal) distribution, the precision is typically characterized by the standard deviation (sensor noise), σ.

8.2.1.2.1 Wide-Range Calibration

To begin calibration, select an object temperature (T_{OBJ}) and a value for the die temperature (T_{DIE}). With these system temperatures stable, take a statistically significant number of samples of V_{Sensor} (results shown in register 00h).

in this example, 64 samples were taken. Do not use the object temperature readings given in register 03h; these values are invalid before calibration.

To compensate for first order drift in system temperatures, it is often useful to normalize the data set. For this purpose, for each temperature set, the sensor voltage data (given in register 00h) is normalized by first finding the best fit line of the form shown in Equation 11:

$$\text{Sensor (mV)} = a \times \text{SampleNo} + b \tag{11}$$

The normalized data for each data set is then calculated as shown in Equation 12:

$$\text{Sensor}_{NORM}\ (\text{mV}) = \text{Sensor}_{MEAS} - (a \times \text{SampleNo} + b) \tag{12}$$

The normalized data, V_{Sensor_norm}, is centered on zero mean, and is first-order corrected for long-term drift. The standard deviation for each data set is then calculated to estimate the sensor noise, σ. Verify that the data are limited by white noise and no other effects. For a sensor-noise-limited data set, v_{SENSOR} σ is typically < 1 µV, and preferably < 0.5 µV after first-order correction for drift, as described previously. If this condition is not satisfied, then the calibration accuracy is limited by external system factors (for example, convection or conduction). Repeat this process for each combination of T_{OBJ} and T_{DIE} for which the calibration is to be performed. The normalized data are used only for evaluating the suitability of the data set for calibration, and not for the actual calibration itself.

For calibration, the mean value, $<V_{SENSOR}>$, is calculated for each combination of T_{OBJ} and T_{DIE}, as shown in Table 12. Using the mean value minimizes error introduced by random noise. Based on the means, a set of coefficients is generated based on a user-selected optimization criteria for Equation 7. Common criteria are minimizing the maximum error, minimizing the average error, and so on. For a detailed discussion of optimization methods, see SBOU142 — *TMP007 Calibration Guide*.

Table 12. Mean Values

T_{OBJ}	T_{DIE}			
	0°C	20°C	40°C	60°C
0°C	$<V_{SENSOR}>$	$<V_{SENSOR}>$	$<V_{SENSOR}>$	$<V_{SENSOR}>$
20°C	$<V_{SENSOR}>$	$<V_{SENSOR}>$	$<V_{SENSOR}>$	$<V_{SENSOR}>$
40°C	$<V_{SENSOR}>$	$<V_{SENSOR}>$	$<V_{SENSOR}>$	$<V_{SENSOR}>$
60°C	$<V_{SENSOR}>$	$<V_{SENSOR}>$	$<V_{SENSOR}>$	$<V_{SENSOR}>$

Copyright © 2014–2015, Texas Instruments Incorporated

8.2.1.2.2 Verifying the Calibration

The next step is to use the generated coefficients to verify the calibration, and determine the accuracy of the system. For common calibration (C) , the same coefficients are used for all devices; in unit calibration (U) the coefficients are calculated for each device. Common calibration includes device-to-device variation, and thus is less accurate, but much easier to implement. Unit calibration is more accurate, and eliminates device variation, but requires more effort to implement. The choice depends on the application requirements for accuracy versus implementation effort.

Mean calibration error at each point is defined as shown in Equation 13:

$$E_{MEAN} = \frac{1}{N}\sum_{1}^{N}(T_{OBJ_PREDICT} - T_{OBJ_ACTUAL})$$

where

- $T_{OBJ_PREDICT}$ is the temperature based on the calibration coefficients.
- T_{OBJ_ACTUAL} is the known object temperature, measured independently.
- N is the number of devices in the calibration set. (13)

The mean error graph (see Figure 54) provides an efficient method of understanding how the systematic errors vary across the temperature ranges of interest. This graph also provides a means of weighing the benefits and efforts of common versus unit calibration for a particular application.

Note that calibration does not affect the temporal random noise observed, as shown in Figure 55. The standard deviation of the temperature error is independent of the calibration if the random error is dominated by the sensor noise and not external system factors, such as convection and conduction. For common calibration, the total standard deviation increases because of the effects of device-to-device variation. This standard deviation is calculated in the usual way, by substituting $T_{OBJ_PREDICT}$ for the mean in the standard deviation formula.

The accuracy is then defined as the mean calibration error plus the random errors from all sources. For this example application, use the criteria shown in Equation 14:

$$\text{Accuracy} = \text{Mean Calibration Error} \pm 3 \text{ Standard Deviations} \quad (14)$$

The resulting accuracy over T_{OBJ} and T_{DIE} is shown in Figure 10 and Figure 11 for the unit- and common-calibration approaches, respectively. Clearly, the unit calibration results in higher accuracy, though common calibration is applicable for many application requirements.

8.2.1.3 Application Curves

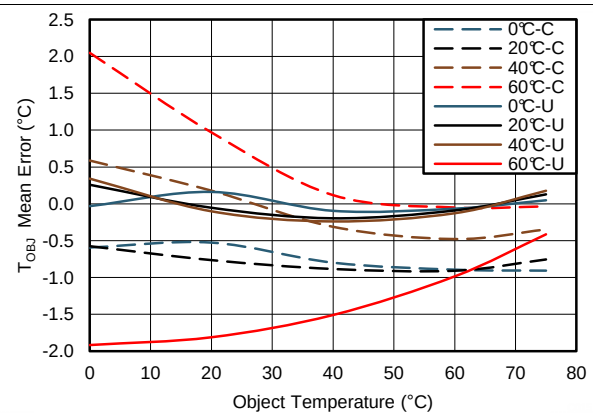

Figure 54. Mean Calibration Error, Wide Range Over T_{DIE}

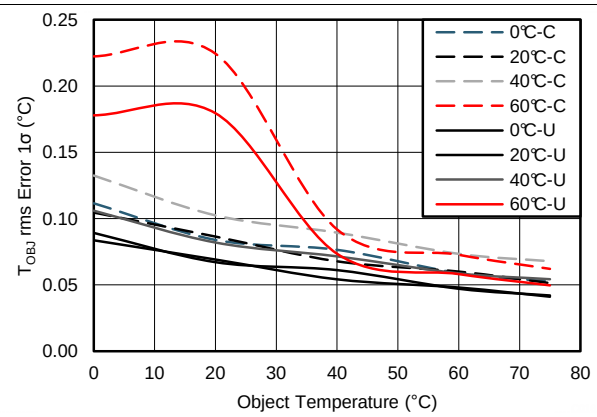

Figure 55. Noise in Temperature Measurement, Wide Range Over T_{DIE}

8.2.2 Narrow-Range Calibration Example: T_{OBJ} = 33°C to 41°C, Unit vs Common Calibration

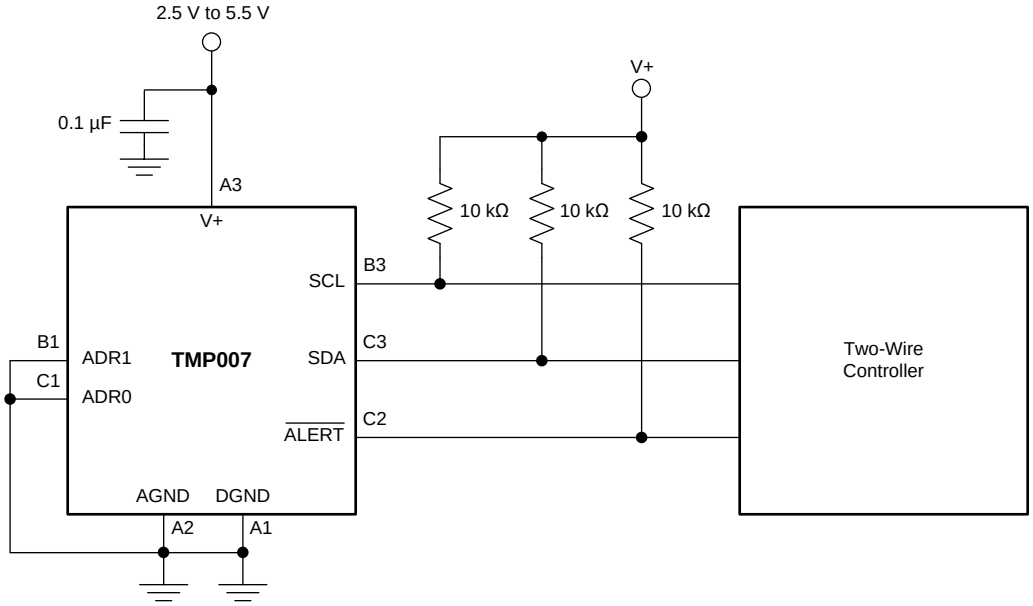

Figure 56. Typical Application Circuit

8.2.2.1 Design Requirements

For this application, the system must operate over the environment described in Table 13.

Table 13. Narrow-Range Requirements

DESIGN PARAMETER	EXAMPLE VALUE	COMMENT
N	16	Number of devices in calibration set
Minimum T_{DIE}	25°C	Minimum expected die temperature
Maximum T_{DIE}	30°C	Maximum expected die temperature
Minimum T_{OBJ}	33°C	Minimum expected objected temperature
Maximum T_{OBJ}	41°C	Maximum expected object temperature
ε	0.95	Object emissivity
Field of view	110°	Field of view subtended by object
Conversion rate	1 sample/second	

Select a set of values for T_{DIE} and T_{OBJ} to generate the calibration set. At a minimum, include the four extreme points of the temperature ranges desired. In practice, it is best to include a number of intermediate points as well. This example uses the values shown in Table 14, with an X marking the values chosen for measurement. In this application, the calibration set is weighted more densely around the region of interest.

Table 14. Narrow-Range Measurement Values

	T_{OBJ}											
T_{DIE}	33°C	34°C	35°C	36°C	36.5°C	37°C	37.5°C	38°C	38.5°C	39°C	40°C	41°C
25°C	X	X	X	X	X	X	X	X	X	X	X	X
30°C		X		X		X		X		X		X

8.2.2.2 Detailed Design Procedure

Before attempting to calibrate the system, it is necessary to establish the stability of the system. Noise is a measure of precision, which is the random deviation from the mean of the distribution. For a Gaussian (or normal) distribution, the precision is typically characterized by the standard deviation (sensor noise), σ.

Copyright © 2014–2015, Texas Instruments Incorporated

8.2.2.2.1 Narrow-Range Calibration

To begin calibration, select an object temperature (T_{OBJ}) and a value for the die temperature (T_{DIE}). With these system temperatures stable, take a statistically significant number of samples of V_{Sensor} (results shown in register 00h).

in this example, 64 samples were taken. Do not use the object temperature readings given in register 03h; these values are invalid before calibration.

To compensate for first order drift in system temperatures, it is often useful to normalize the data set. For this purpose, for each temperature set, the sensor voltage data (given in register 00h) is normalized by first finding the best fit line of the form shown in Equation 15:

$$\text{Sensor (mV)} = a \times \text{SampleNo} + b \tag{15}$$

The normalized data for each data set is then calculated as shown in Equation 16:

$$\text{Sensor}_{NORM}\ (\text{mV}) = \text{Sensor}_{MEAS} - (a \times \text{SampleNo} + b) \tag{16}$$

The normalized data, V_{Sensor_norm}, is centered on zero mean, and is first-order corrected for long-term drift. The standard deviation for each data set is then calculated to estimate the sensor noise, σ. Verify that the data are limited by white noise and no other effects. For a sensor-noise-limited data set, v_{SENSOR} σ is typically < 1 µV, and preferably < 0.5 µV after first-order correction for drift, as described previously. If this condition is not satisfied, then the calibration accuracy is limited by external system factors (for example, convection or conduction). Repeat this process for each combination of T_{OBJ} and T_{DIE} for which the calibration is to be performed. The normalized data are used only for evaluating the suitability of the data set for calibration, and not for the actual calibration itself.

For calibration, the mean value, $<V_{SENSOR}>$, is calculated for each combination of T_{OBJ} and T_{DIE}, as shown in Table 15. Using the mean value minimizes error introduced by random noise. Based on the means, a set of coefficients is generated based on a user-selected optimization criteria for Equation 7. Common criteria are minimizing the maximum error, minimizing the average error, and so on. For a detailed discussion of optimization methods, see SBOU142 — *TMP007 Calibration Guide*.

Table 15. Mean Values

T_{DIE} (°C)	T_{OBJ}											
	33°C	34°C	35°C	36°C	36.5°C	37°C	37.5°C	38°C	38.5°C	39°C	40°C	41°C
25	$<V_{SENSOR}>$	$<V_{SENSOR}>$	$<V_{SENSOR}>$	$<V_{SENSOR}>$	$<V_{SENSOR}>$	$<V_{SENSOR}>$	$<V_{SENSOR}>$	$<V_{SENSOR}>$	$<V_{SENSOR}>$	$<V_{SENSOR}>$	$<V_{SENSOR}>$	$<V_{SENSOR}>$
30		$<V_{SENSOR}>$		$<V_{SENSOR}>$		$<V_{SENSOR}>$		$<V_{SENSOR}>$		$<V_{SENSOR}>$		$<V_{SENSOR}>$

8.2.2.2.2 Verifying the Calibration

The next step is to use the generated coefficients to verify the calibration, and determine the accuracy of the system. For common calibration (C) , the same coefficients are used for all devices; in unit calibration (U) the coefficients are calculated for each device. Common calibration includes device-to-device variation, and thus is less accurate, but much easier to implement. Unit calibration is more accurate, and eliminates device variation, but requires more effort to implement. The choice depends on the application requirements for accuracy versus implementation effort.

Mean calibration error at each point is defined as shown in Equation 17:

$$E_{MEAN} = \frac{1}{N}\sum_{1}^{N}(T_{OBJ_PREDICT} - T_{OBJ_ACTUAL})$$

where

- $T_{OBJ_PREDICT}$ is the temperature based on the calibration coefficients.
- T_{OBJ_ACTUAL} is the known object temperature, measured independently.
- N is the number of devices in the calibration set. (17)

The mean error graph (see Figure 54) provides an efficient method of understanding how the systematic errors vary across the temperature ranges of interest. This graph also provides a means of weighing the benefits and efforts of common versus unit calibration for a particular application.

Note that calibration does not affect the temporal random noise observed, as shown in Figure 55. The standard deviation of the temperature error is independent of the calibration if the random error is dominated by the sensor noise and not external system factors, such as convection and conduction. For common calibration, the total standard deviation increases because of the effects of device-to-device variation. This standard deviation is calculated in the usual way, by substituting $T_{OBJ_PREDICT}$ for the mean in the standard deviation formula.

The accuracy is then defined as the mean calibration error plus the random errors from all sources. For this example application, use the criteria shown in Equation 14:

$$\text{Accuracy} = \text{Mean Calibration Error} \pm 3 \text{ Standard Deviations} \tag{18}$$

The resulting accuracy over T_{OBJ} and T_{DIE} is shown in Figure 57 for the unit- and common-calibration approaches. Clearly, the unit calibration results in higher accuracy, though common calibration is applicable for many application requirements.

Reduce the random temporal error by increasing the sample time. Figure 58 shows the effects of increasing the sample time on the standard deviation. As a result of device-to-device variation, the effects of increased sample time on the common-calibration scheme is negligible; however, an improvement is seen for the unit calibration scheme.

Finally, the resulting accuracy is shown for the different sample times as a function of T_{DIE} in Figure 59. Improve the accuracy by generating separate coefficient sets for T_{DIE} = 25°C and T_{DIE} = 30°C.

8.2.2.3 Application Curves

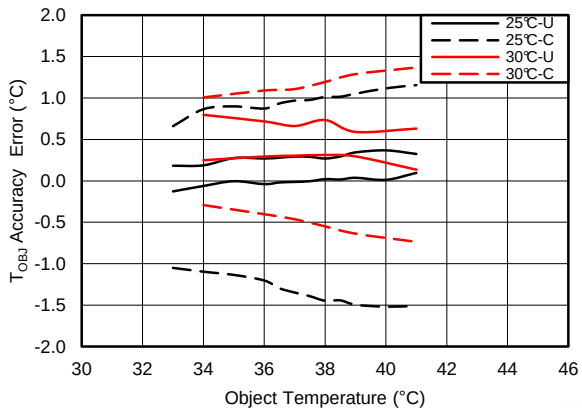

Figure 57. Mean Error with Unit and Common Calibration, Narrow Range Over T_{DIE}

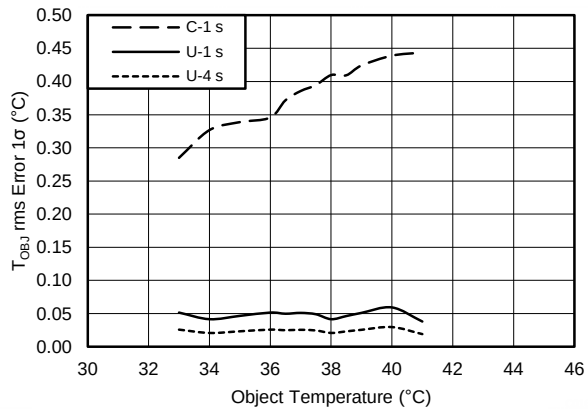

Figure 58. RMS Temperature Error vs Conversion Rate

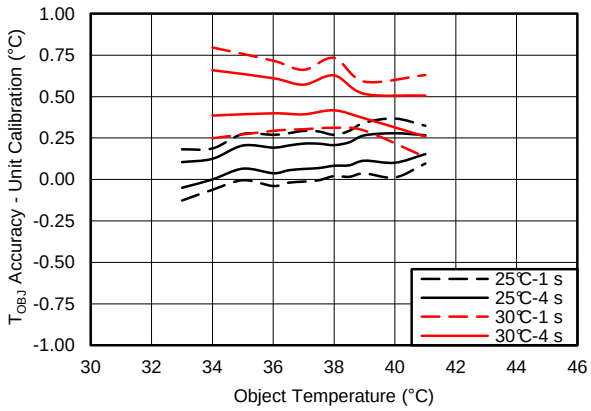

Figure 59. Accuracy vs Conversion Rate (Unit Calibration)

Copyright © 2014–2015, Texas Instruments Incorporated

8.3 System Examples

8.3.1 Use of NEP, NETD, and Responsivity in Estimating System Performance

It is often necessary to estimate system performance as part of the design process. A key system parameter is temperature accuracy for a given set of parameters. Table 16 lists example parameters for estimating system performance.

Table 16. Estimating System Performance Parameters

DESIGN PARAMETER	EXAMPLE VALUE	COMMENT
Object distance	10 mm	Distance to object
Object diameter	15 mm	Object size and geometry
ε	0.95	Object emissivity
T_{DIE}	23°C	Die temperature
T_{OBJ}	30°C	Maximum expected object temperature
FOV	110°	Field of view subtended by object
Responsivity (R_0)	10.8 V/W	Responsivity for T_{DIE} = 25°C, θ = 0°
Responsivity (R)	9 V/W	Responsivity for 110° FOV
Sensor rms noise	0.20 µV	RMS sensor noise at T_{DIE} = 25°C
NEP	30 nW	Thermal power equivalent to rms sensor noise
Conversion rate	1 SPS	SPS = samples per second

The system accuracy is a function of T_{OBJ}, T_{DIE}, ε, and radiation transfer.

The radiation transfer factor is system dependent, and is affected by the object distance and geometry (for example, planar versus curved surfaces, or presence of lenses). For an planar object perpendicular to the detector axis (see Figure 19), the radiation transfer follows the well-known $\sin^2(\theta)$ result. This expression can be used with a radiation transfer function responsivity value of 9 V/W to estimate system performance.

Because of the angular dependence of the TMP007 detector response, a more accurate representation for the same radiative transfer function geometry is shown in Equation 19:

$$\frac{2}{3}\left(1-\cos^3\theta\right)R_0$$

where

- R_0 is the responsivity of the detector to a point source at an angle normal to the detector (θ = 0 in Figure 19. R_0 has a value of ~10.8 V/W at 25°C. (19)

The responsivity value of 9 V/W is based on a system with a 110° FOV.

Using the device-specific radiation transfer expression and R0, the detector response is shown in Equation 20:

$$V_{SENSOR} = \frac{2}{3}\varepsilon_{OBJ}\sigma\left(T_{OBJ}^4 - T_{DIE}^4\right)A_{det}(1-\cos^3\theta)R_0$$

where

- ε_{OBJ} is the emissivity of the object (0.95).
- σ is the Stefan-Boltzmann constant (5.67×10^{-12} W/(cm^{2}K^4).
- T_{OBJ} is the object temperature (273 K + 30°C).
- T_{DIE} is the detector temperature (273 K + 23°C).
- A_{det} is the detector active area (1.09×10^{-3} cm^2)
- θ is the half-angle subtended by the object as viewed from the detector.
- R_0 is the responsivity (~10.8 V/W for the specified temperatures). (20)

The value of cos θ is shown in Equation 21:

$$\cos\theta = \frac{2r}{\sqrt{4r^2 + D^2}} = 0.800$$

where

- *r* is the distance between the detector and the object (10 mm).
- *D* is the diameter of the object (15 mm). (21)

Differentiating with respect to object temperature, a small change in temperature creates a small change in the measured voltage given by Equation 22:

$$\Delta V_{OUT} = \tfrac{8}{3}\varepsilon_{OBJ}\sigma_B T_{OBJ}^3 A_{det}\left(1 - \cos^3\theta\right)R_0\,\Delta T_{OBJ} \tag{22}$$

Substituting values for the parameters yields Equation 23:

$$\Delta V_{SENSOR} = 2.3\frac{\mu V}{K} \times T_{OBJ} \tag{23}$$

Based on Figure 4, the sensor rms noise at T_{DIE} = 25°C is ~0.25 µV; thus, the rms variation in temperature measurement is as shown in Equation 24:

$$\Delta T_{OBJ} = \frac{Sensor_{rms\,noise}}{\Delta V_{OUT}} = \frac{0.25\ \mu V}{2.3\ \mu V/K} \approx 110\ mK \tag{24}$$

The peak-to-peak noise is approximately six times the rms noise; therefore, estimate an accuracy of approximately ±0.33°C.

This estimate can also be made using the noise-equivalent power (NEP), noting that NEP is the ratio of noise to responsivity, as shown in Equation 25:

$$NEP = \frac{\Delta V_{OUT}}{R_0} = \tfrac{8}{3}\varepsilon_{OBJ}\sigma_B T_{OBJ}^3 A_{det}\left(1 - \cos^3\theta\right)\Delta T_{OBJ} = \left(213\frac{nW}{K}\right)\Delta T_{OBJ} \tag{25}$$

Assuming the system is sensor-noise limited, then from Figure 5, the NEP is ~30 nW at 25°C, as shown in Equation 26:

$$\Delta T_{OBJ} = \frac{30\ nW}{213\ nW/K} \approx 140\ mK \tag{26}$$

Again, the peak-to-peak noise is approximately 6X the rms noise; therefore estimate an accuracy of approximately ±0.42°C.

The different results from these two techniques is because of estimated values used for some parameters. The purpose of these techniques is not to obtain exact answers, but rather to quickly estimate the feasibility of a system implementation based on basic system parameters. These examples are intended only as guidelines; the specific values for the parameters depend on the specific system details.

9 Power-Supply Recommendations

The TMP007 is designed to operate with a power supply voltage (V_S) of between 2.5 V and 5.5 V. This input supply must be well regulated. The die temperature measurement (T_{DIE}) dependence on supply voltage is typically 20 m°C/V for T_{DIE} > 0°C (see Figure 9). The power-on reset (POR) has a nominal value of 1.9 V at T_{DIE} = 25°C. The POR increases with decreasing die temperature (see Figure 12). Place the decoupling capacitor (0.1 µF recommended) as close as possible to the device without obstructing the field of view.

As an aid to designing the power supply and estimating power and energy requirements, a number of typical curves are supplied. The typical characteristics for supply current vs T_{DIE} (Continuous Conversion) are given in Figure 15. Typical values for shutdown current as a function of T_{DIE} and supply voltage are given in Figure 14.

Copyright © 2014–2015, Texas Instruments Incorporated

10 Layout

10.1 Layout Guidelines

The IR thermopile sensor in the TMP007 is as susceptible to conducted and radiant IR energy from below the sensor on the PCB as it is to the IR energy from objects in its forward-looking field of view. When the area of PCB below the TMP007 is at the same temperature as the die or substrate of the TMP007, heat is not transferred between the IR sensor and the PCB. However, temperature changes on a closely-placed target object or other events that lead to changes in system temperature can cause the PCB temperature and the TMP007 temperature to drift apart from each other. This drift in temperatures can cause a heat transfer between the IR sensor and the PCB to occur. Because of the small distance between the PCB and the bottom of the sensor, this heat energy will be conducted (as opposed to radiated) through the thin layer of air between the IR sensor and the PCB below it. This heat conduction causes offsets in the IR sensor voltage readings and ultimately leads to temperature calculation errors. To prevent and minimize these errors, the TMP007 layout must address critical factors:

Thermally isolate the TMP007 from the rest of the PCB and any heat sources on it. Provide a stable thermal environment to reduce the noise in the measurement readings

Figure 60 illustrates the concept of thermally isolating the TMP007 from the PCB and external heat sources such as other components, air currents, and so on.

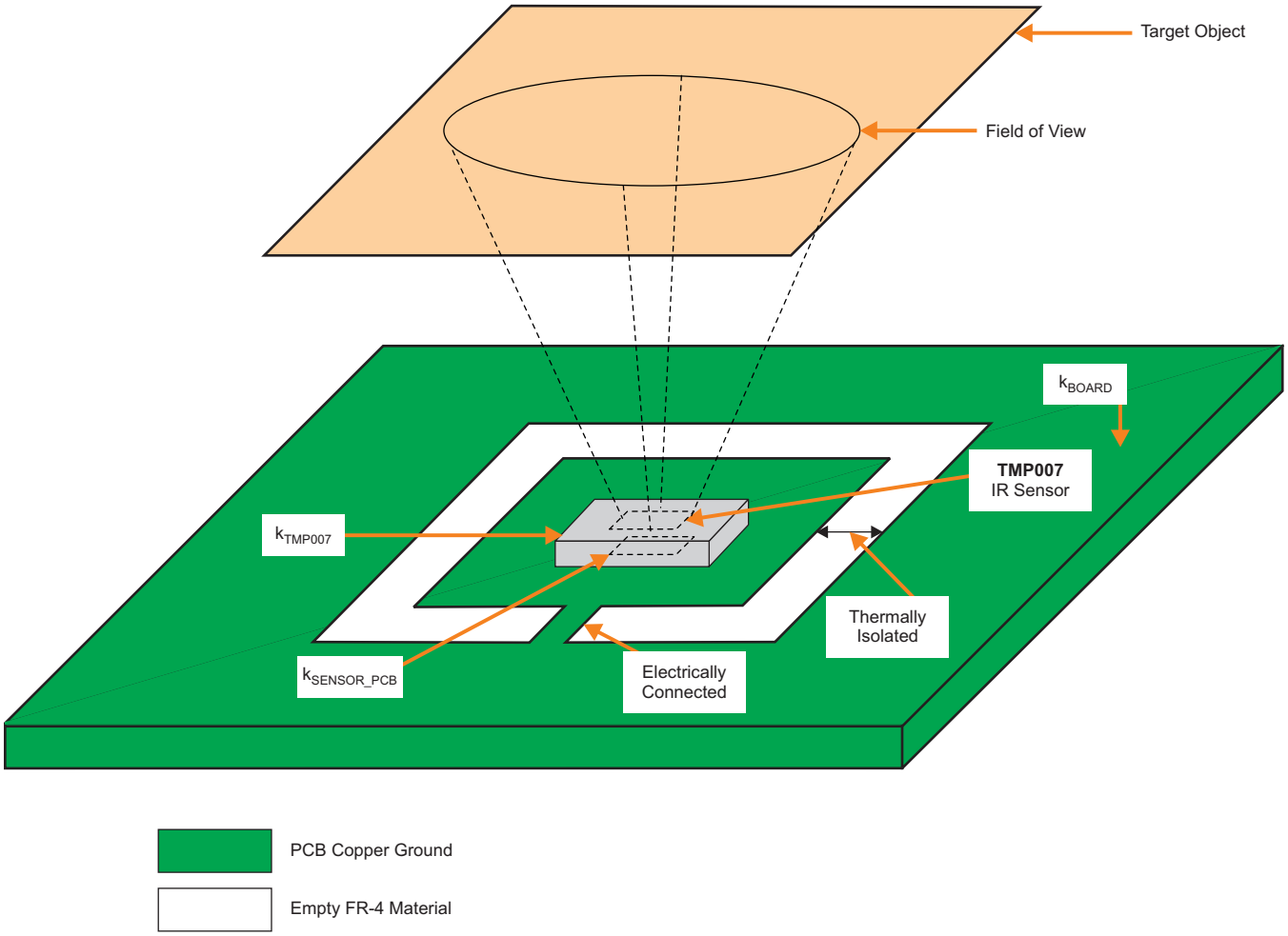

Figure 60. Principle of TMP007 Thermal Isolation

10.2 Layout Examples

For more detailed information, refer to SBOU143 — *TMP007 Layout and Assembly Guide*.

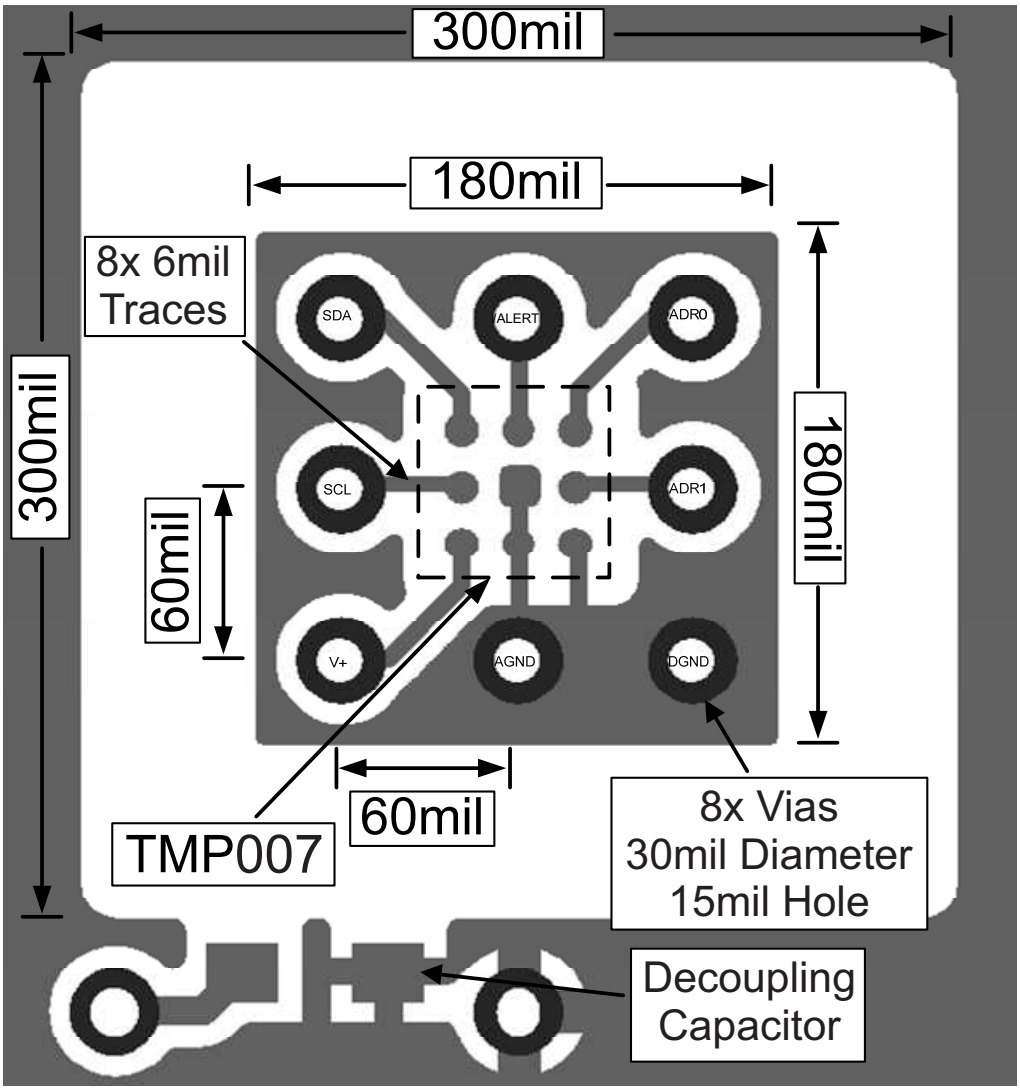

Figure 61. Layout Example

Copyright © 2014–2015, Texas Instruments Incorporated

Layout Examples (continued)

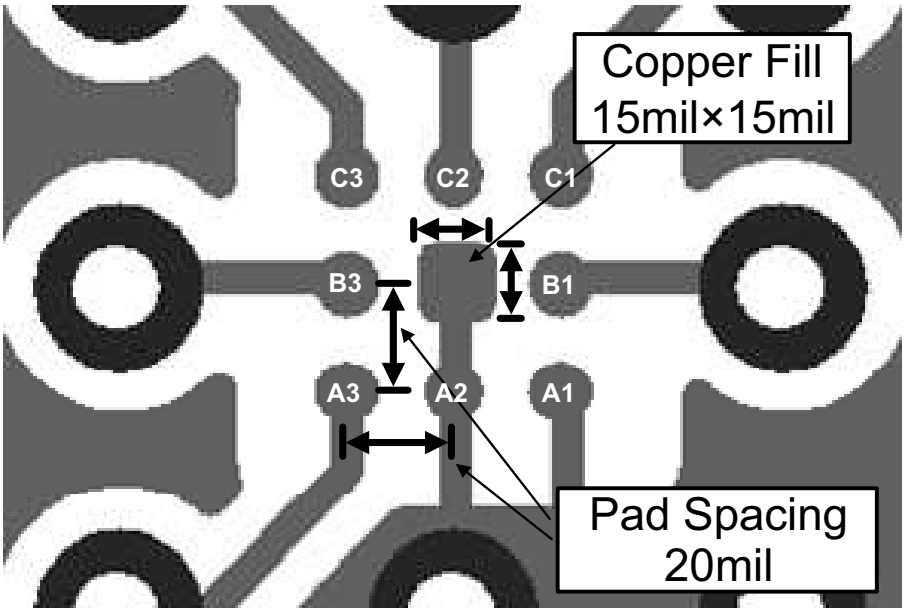

Figure 62. Enlarged View

11 Device and Documentation Support

11.1 Device Support

11.1.1 Device Nomenclature

The device performance is characterized by the signal, responsivity, and the noise of the sensor. The sensor noise can be characterized in terms of the raw sensor voltage, or in terms of a reference system with known optical transfer function.

Responsivity A measure of the voltage generated by the thermopile as a function of the thermal radiation incident on the device. The responsivity is measured in V/W. Typically incident radiations are in µW and sensor output voltages in µV.

Sensor Noise The noise voltage intrinsic to the sensor given in nV. This parameter is conversion-time dependent.

Noise Equivalent Power (NEP) The smallest thermal power difference that the detector can reliably detect; measured in nW. The NEP is a function of the sensor noise and the responsivity.

Noise Equivalent Temperature Difference (NETD) The smallest temperature difference the detector can reliably detect; measured in milliKelvins (mK). The NETD is a function of the sensor noise, responsivity and the system specific optical path.

For comparison purposes, NETD is given for a reference system without a lens and with an ideal (nonabsorbing) F/1 lens.

11.2 Documentation Support

11.2.1 Related Documentation

SBOU142 — *TMP007 Calibration Guide*.

SBOU143 — *TMP007 Layout and Assembly Guide*.

11.3 Community Resources

The following links connect to TI community resources. Linked contents are provided *AS IS* by the respective contributors. They do not constitute TI specifications and do not necessarily reflect TI's views; see TI's Terms of Use.

TI E2E™ Online Community ***TI's Engineer-to-Engineer (E2E) Community.*** Created to foster collaboration among engineers. At e2e.ti.com, you can ask questions, share knowledge, explore ideas and help solve problems with fellow engineers.

Design Support ***TI's Design Support*** Quickly find helpful E2E forums along with design support tools and contact information for technical support.

11.4 Trademarks

E2E is a trademark of Texas Instruments.
All other trademarks are the property of their respective owners.

11.5 Electrostatic Discharge Caution

This integrated circuit can be damaged by ESD. Texas Instruments recommends that all integrated circuits be handled with appropriate precautions. Failure to observe proper handling and installation procedures can cause damage.

ESD damage can range from subtle performance degradation to complete device failure. Precision integrated circuits may be more susceptible to damage because very small parametric changes could cause the device not to meet its published specifications.

11.6 Glossary

SLYZ022 — *TI Glossary*.

This glossary lists and explains terms, acronyms, and definitions.

Copyright © 2014–2015, Texas Instruments Incorporated

12 Mechanical, Packaging, and Orderable Information

The following pages include mechanical, packaging, and orderable information. This information is the most current data available for the designated devices. This data is subject to change without notice and revision of this document. For browser-based versions of this data sheet, refer to the left-hand navigation.

PACKAGING INFORMATION

Orderable Device	Status (1)	Package Type	Package Drawing	Pins	Package Qty	Eco Plan (2)	Lead/Ball Finish (6)	MSL Peak Temp (3)	Op Temp (°C)	Device Marking (4/5)	Samples
TMP007AIYZFR	NRND	DSBGA	YZF	8	3000	Green (RoHS & no Sb/Br)	SNAGCU	Level-2-260C-1 YEAR	-40 to 125	TMP007	
TMP007AIYZFT	NRND	DSBGA	YZF	8	250	Green (RoHS & no Sb/Br)	SNAGCU	Level-2-260C-1 YEAR	-40 to 125	TMP007	

(1) The marketing status values are defined as follows:
ACTIVE: Product device recommended for new designs.
LIFEBUY: TI has announced that the device will be discontinued, and a lifetime-buy period is in effect.
NRND: Not recommended for new designs. Device is in production to support existing customers, but TI does not recommend using this part in a new design.
PREVIEW: Device has been announced but is not in production. Samples may or may not be available.
OBSOLETE: TI has discontinued the production of the device.

(2) **RoHS:** TI defines "RoHS" to mean semiconductor products that are compliant with the current EU RoHS requirements for all 10 RoHS substances, including the requirement that RoHS substance do not exceed 0.1% by weight in homogeneous materials. Where designed to be soldered at high temperatures, "RoHS" products are suitable for use in specified lead-free processes. TI may reference these types of products as "Pb-Free".
RoHS Exempt: TI defines "RoHS Exempt" to mean products that contain lead but are compliant with EU RoHS pursuant to a specific EU RoHS exemption.
Green: TI defines "Green" to mean the content of Chlorine (Cl) and Bromine (Br) based flame retardants meet JS709B low halogen requirements of <=1000ppm threshold. Antimony trioxide based flame retardants must also meet the <=1000ppm threshold requirement.

(3) MSL, Peak Temp. - The Moisture Sensitivity Level rating according to the JEDEC industry standard classifications, and peak solder temperature.

(4) There may be additional marking, which relates to the logo, the lot trace code information, or the environmental category on the device.

(5) Multiple Device Markings will be inside parentheses. Only one Device Marking contained in parentheses and separated by a "~" will appear on a device. If a line is indented then it is a continuation of the previous line and the two combined represent the entire Device Marking for that device.

(6) Lead/Ball Finish - Orderable Devices may have multiple material finish options. Finish options are separated by a vertical ruled line. Lead/Ball Finish values may wrap to two lines if the finish value exceeds the maximum column width.

Important Information and Disclaimer: The information provided on this page represents TI's knowledge and belief as of the date that it is provided. TI bases its knowledge and belief on information provided by third parties, and makes no representation or warranty as to the accuracy of such information. Efforts are underway to better integrate information from third parties. TI has taken and continues to take reasonable steps to provide representative and accurate information but may not have conducted destructive testing or chemical analysis on incoming materials and chemicals. TI and TI suppliers consider certain information to be proprietary, and thus CAS numbers and other limited information may not be available for release.

In no event shall TI's liability arising out of such information exceed the total purchase price of the TI part(s) at issue in this document sold by TI to Customer on an annual basis.

TAPE AND REEL INFORMATION

REEL DIMENSIONS

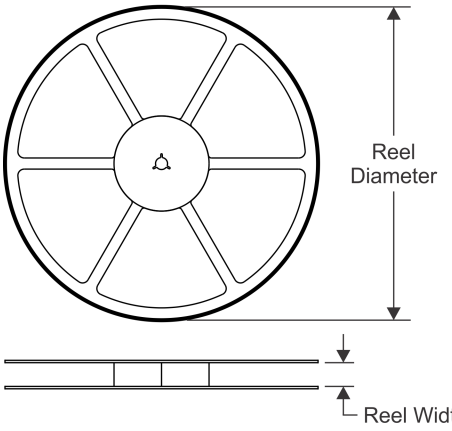

TAPE DIMENSIONS

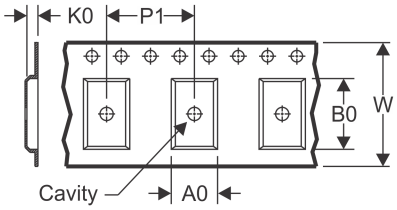

A0	Dimension designed to accommodate the component width
B0	Dimension designed to accommodate the component length
K0	Dimension designed to accommodate the component thickness
W	Overall width of the carrier tape
P1	Pitch between successive cavity centers

QUADRANT ASSIGNMENTS FOR PIN 1 ORIENTATION IN TAPE

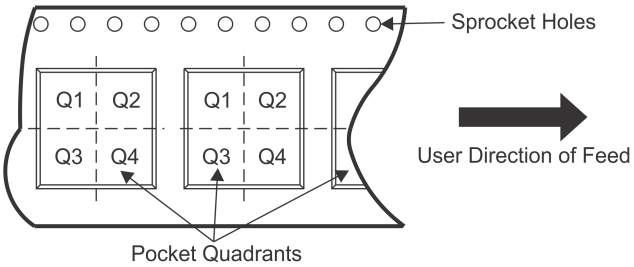

*All dimensions are nominal

Device	Package Type	Package Drawing	Pins	SPQ	Reel Diameter (mm)	Reel Width W1 (mm)	A0 (mm)	B0 (mm)	K0 (mm)	P1 (mm)	W (mm)	Pin1 Quadrant
TMP007AIYZFR	DSBGA	YZF	8	3000	180.0	8.4	2.07	2.07	0.81	4.0	8.0	Q1
TMP007AIYZFT	DSBGA	YZF	8	250	180.0	8.4	2.07	2.07	0.81	4.0	8.0	Q1

TAPE AND REEL BOX DIMENSIONS

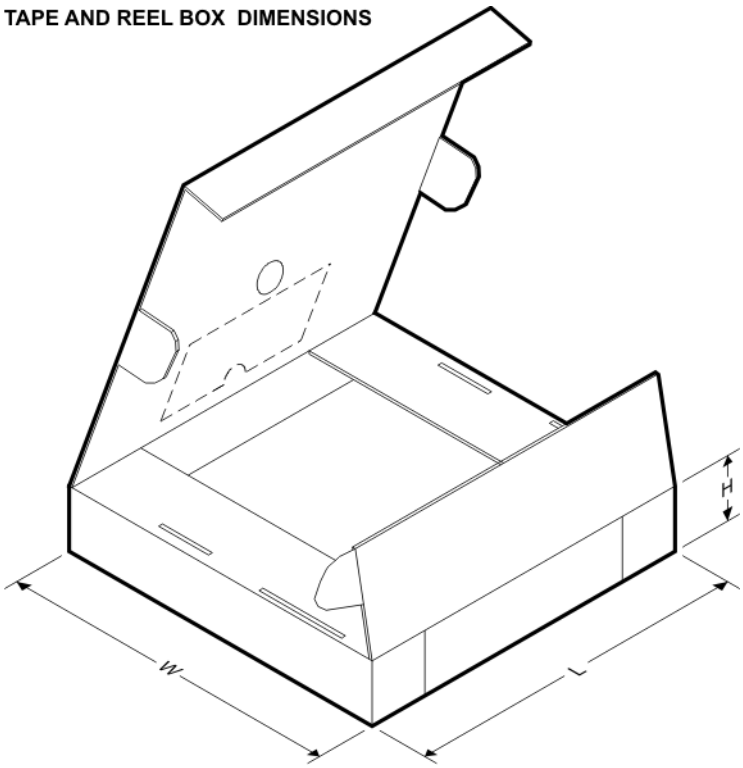

*All dimensions are nominal

Device	Package Type	Package Drawing	Pins	SPQ	Length (mm)	Width (mm)	Height (mm)
TMP007AIYZFR	DSBGA	YZF	8	3000	210.0	185.0	35.0
TMP007AIYZFT	DSBGA	YZF	8	250	210.0	185.0	35.0

YZF (S-XBGA-N8) DIE-SIZE BALL GRID ARRAY

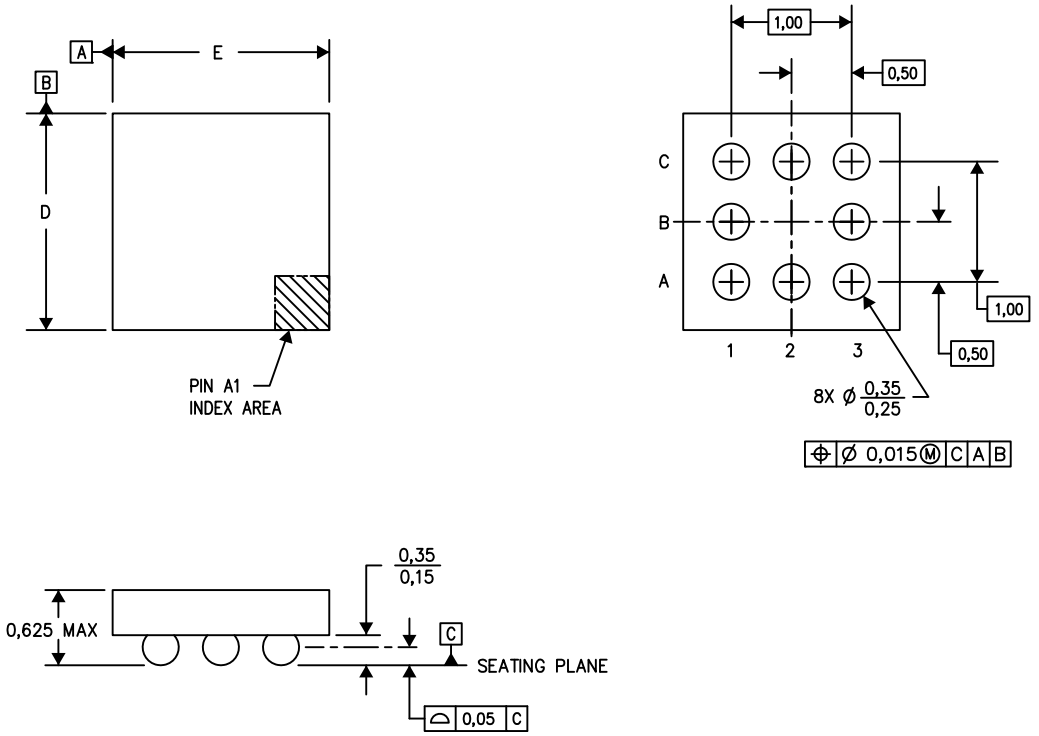

D: Max = 1.918 mm, Min =1.858 mm

E: Max = 1.898 mm, Min =1.838 mm

4205058-3/P 07/13

NOTES: A. All linear dimensions are in millimeters. Dimensioning and tolerancing per ASME Y14.5M-1994.
B. This drawing is subject to change without notice.
C. NanoFree™ package configuration.

NanoFree is a trademark of Texas Instruments.

IMPORTANT NOTICE

Texas Instruments Incorporated (TI) reserves the right to make corrections, enhancements, improvements and other changes to its semiconductor products and services per JESD46, latest issue, and to discontinue any product or service per JESD48, latest issue. Buyers should obtain the latest relevant information before placing orders and should verify that such information is current and complete.

TI's published terms of sale for semiconductor products (http://www.ti.com/sc/docs/stdterms.htm) apply to the sale of packaged integrated circuit products that TI has qualified and released to market. Additional terms may apply to the use or sale of other types of TI products and services.

Reproduction of significant portions of TI information in TI data sheets is permissible only if reproduction is without alteration and is accompanied by all associated warranties, conditions, limitations, and notices. TI is not responsible or liable for such reproduced documentation. Information of third parties may be subject to additional restrictions. Resale of TI products or services with statements different from or beyond the parameters stated by TI for that product or service voids all express and any implied warranties for the associated TI product or service and is an unfair and deceptive business practice. TI is not responsible or liable for any such statements.

Buyers and others who are developing systems that incorporate TI products (collectively, "Designers") understand and agree that Designers remain responsible for using their independent analysis, evaluation and judgment in designing their applications and that Designers have full and exclusive responsibility to assure the safety of Designers' applications and compliance of their applications (and of all TI products used in or for Designers' applications) with all applicable regulations, laws and other applicable requirements. Designer represents that, with respect to their applications, Designer has all the necessary expertise to create and implement safeguards that (1) anticipate dangerous consequences of failures, (2) monitor failures and their consequences, and (3) lessen the likelihood of failures that might cause harm and take appropriate actions. Designer agrees that prior to using or distributing any applications that include TI products, Designer will thoroughly test such applications and the functionality of such TI products as used in such applications.

TI's provision of technical, application or other design advice, quality characterization, reliability data or other services or information, including, but not limited to, reference designs and materials relating to evaluation modules, (collectively, "TI Resources") are intended to assist designers who are developing applications that incorporate TI products; by downloading, accessing or using TI Resources in any way, Designer (individually or, if Designer is acting on behalf of a company, Designer's company) agrees to use any particular TI Resource solely for this purpose and subject to the terms of this Notice.

TI's provision of TI Resources does not expand or otherwise alter TI's applicable published warranties or warranty disclaimers for TI products, and no additional obligations or liabilities arise from TI providing such TI Resources. TI reserves the right to make corrections, enhancements, improvements and other changes to its TI Resources. TI has not conducted any testing other than that specifically described in the published documentation for a particular TI Resource.

Designer is authorized to use, copy and modify any individual TI Resource only in connection with the development of applications that include the TI product(s) identified in such TI Resource. NO OTHER LICENSE, EXPRESS OR IMPLIED, BY ESTOPPEL OR OTHERWISE TO ANY OTHER TI INTELLECTUAL PROPERTY RIGHT, AND NO LICENSE TO ANY TECHNOLOGY OR INTELLECTUAL PROPERTY RIGHT OF TI OR ANY THIRD PARTY IS GRANTED HEREIN, including but not limited to any patent right, copyright, mask work right, or other intellectual property right relating to any combination, machine, or process in which TI products or services are used. Information regarding or referencing third-party products or services does not constitute a license to use such products or services, or a warranty or endorsement thereof. Use of TI Resources may require a license from a third party under the patents or other intellectual property of the third party, or a license from TI under the patents or other intellectual property of TI.

TI RESOURCES ARE PROVIDED "AS IS" AND WITH ALL FAULTS. TI DISCLAIMS ALL OTHER WARRANTIES OR REPRESENTATIONS, EXPRESS OR IMPLIED, REGARDING RESOURCES OR USE THEREOF, INCLUDING BUT NOT LIMITED TO ACCURACY OR COMPLETENESS, TITLE, ANY EPIDEMIC FAILURE WARRANTY AND ANY IMPLIED WARRANTIES OF MERCHANTABILITY, FITNESS FOR A PARTICULAR PURPOSE, AND NON-INFRINGEMENT OF ANY THIRD PARTY INTELLECTUAL PROPERTY RIGHTS. TI SHALL NOT BE LIABLE FOR AND SHALL NOT DEFEND OR INDEMNIFY DESIGNER AGAINST ANY CLAIM, INCLUDING BUT NOT LIMITED TO ANY INFRINGEMENT CLAIM THAT RELATES TO OR IS BASED ON ANY COMBINATION OF PRODUCTS EVEN IF DESCRIBED IN TI RESOURCES OR OTHERWISE. IN NO EVENT SHALL TI BE LIABLE FOR ANY ACTUAL, DIRECT, SPECIAL, COLLATERAL, INDIRECT, PUNITIVE, INCIDENTAL, CONSEQUENTIAL OR EXEMPLARY DAMAGES IN CONNECTION WITH OR ARISING OUT OF TI RESOURCES OR USE THEREOF, AND REGARDLESS OF WHETHER TI HAS BEEN ADVISED OF THE POSSIBILITY OF SUCH DAMAGES.

Unless TI has explicitly designated an individual product as meeting the requirements of a particular industry standard (e.g., ISO/TS 16949 and ISO 26262), TI is not responsible for any failure to meet such industry standard requirements.

Where TI specifically promotes products as facilitating functional safety or as compliant with industry functional safety standards, such products are intended to help enable customers to design and create their own applications that meet applicable functional safety standards and requirements. Using products in an application does not by itself establish any safety features in the application. Designers must ensure compliance with safety-related requirements and standards applicable to their applications. Designer may not use any TI products in life-critical medical equipment unless authorized officers of the parties have executed a special contract specifically governing such use. Life-critical medical equipment is medical equipment where failure of such equipment would cause serious bodily injury or death (e.g., life support, pacemakers, defibrillators, heart pumps, neurostimulators, and implantables). Such equipment includes, without limitation, all medical devices identified by the U.S. Food and Drug Administration as Class III devices and equivalent classifications outside the U.S.

TI may expressly designate certain products as completing a particular qualification (e.g., Q100, Military Grade, or Enhanced Product). Designers agree that it has the necessary expertise to select the product with the appropriate qualification designation for their applications and that proper product selection is at Designers' own risk. Designers are solely responsible for compliance with all legal and regulatory requirements in connection with such selection.

Designer will fully indemnify TI and its representatives against any damages, costs, losses, and/or liabilities arising out of Designer's non-compliance with the terms and provisions of this Notice.

Mailing Address: Texas Instruments, Post Office Box 655303, Dallas, Texas 75265
Copyright © 2017, Texas Instruments Incorporated